Jeep®

2017 Patriot

OWNER'S MANUAL

VEHICLES SOLD IN CANADA

With respect to any Vehicles Sold in Canada, the name FCA US LLC shall be deemed to be deleted and the name FCA Canada Inc. used in substitution therefore.

DRIVING AND ALCOHOL

Drunken driving is one of the most frequent causes of accidents.

Your driving ability can be seriously impaired with blood alcohol levels far below the legal minimum. If you are drinking, don't drive. Ride with a designated non-drinking driver, call a cab, a friend, or use public transportation.

WARNING!
Driving after drinking can lead to an accident. Your perceptions are less sharp, your reflexes are slower, and your judgment is impaired when you have been drinking. Never drink and then drive.

This manual illustrates and describes the operation of features and equipment that are either standard or optional on this vehicle. This manual may also include a description of features and equipment that are no longer available or were not ordered on this vehicle. Please disregard any features and equipment described in this manual that are not on this vehicle.

FCA US LLC reserves the right to make changes in design and specifications, and/or make additions to or improvements to its products without imposing any obligation upon itself to install them on products previously manufactured.

Copyright © 2016 FCA US LLC

TABLE OF CONTENTS

SECTION		PAGE
1	INTRODUCTION	3
2	GRAPHICAL TABLE OF CONTENTS	9
3	GETTING TO KNOW YOUR VEHICLE	15
4	GETTING TO KNOW YOUR INSTRUMENT PANEL	95
5	SAFETY	129
6	STARTING AND OPERATING	195
7	IN CASE OF EMERGENCY	245
8	SERVICING AND MAINTENANCE	279
9	TECHNICAL SPECIFICATIONS	333
10	MULTIMEDIA	345
11	CUSTOMER ASSISTANCE	403
12	INDEX	409

INTRODUCTION

CONTENTS

■ INTRODUCTION 4
■ ROLLOVER WARNING 4
■ HOW TO USE THIS MANUAL 5
□ Essential Information 5
□ Symbols 6
■ WARNINGS AND CAUTIONS 7
■ VEHICLE MODIFICATIONS/ALTERATIONS 7

INTRODUCTION

Congratulations on selecting your new FCA US LLC vehicle. Be assured that it represents precision workmanship, distinctive styling, and high quality.

The two-wheel drive version of this vehicle was designed for on-road use only. It is not intended for off-road driving or use in other severe conditions suited for a four-wheel drive vehicle.

Before you start to drive this vehicle, read the Owner's Manual. Be sure you are familiar with all vehicle controls, particularly those used for braking, steering, transmission, and transfer case shifting. Learn how your vehicle handles on different road surfaces. Your driving skills will improve with experience. When driving off-road, or working the vehicle, don't overload the vehicle, or expect the vehicle to overcome the natural laws of physics.

Always observe federal, state, provincial, and local laws wherever you drive.

As with other vehicles of this type, failure to operate this vehicle correctly may result in loss of control or a collision. Refer to "Driving Tips" in "Starting And Operating" for further information.

This Owner's Manual has been prepared with the assistance of service and engineering specialists to acquaint you with the operation and maintenance of your vehicle. It is supplemented by Warranty Information, and various customer-oriented documents. Please take the time to read these publications carefully. Following the instructions and recommendations in this manual will help assure safe and enjoyable operation of your vehicle.

NOTE: After reviewing the owner information, it should be stored in the vehicle for convenient referencing and remain with the vehicle when sold.

When it comes to service, remember that your authorized dealer knows your Jeep® vehicle best, has factory-trained technicians and genuine MOPAR® parts, and cares about your satisfaction.

ROLLOVER WARNING

Utility vehicles have a significantly higher rollover rate than other types of vehicles. This vehicle has a higher ground clearance and a higher center of gravity than many passenger vehicles. It is capable of performing better in a wide variety of off-road applications. Driven in an unsafe manner, all vehicles can go out of control. Because of the

higher center of gravity, if this vehicle is out of control it may roll over while some other vehicles may not.

Do not attempt sharp turns, abrupt maneuvers, or other unsafe driving actions that can cause loss of vehicle control. Failure to operate this vehicle safely may result in a collision, rollover of the vehicle, and severe or fatal injury. Drive carefully.

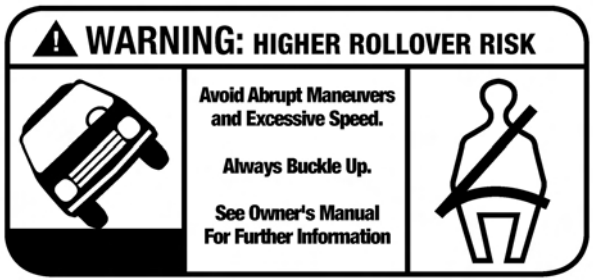

80bfe0f0

Rollover Warning Label

Failure to use the driver and passenger seat belts provided is a major cause of severe or fatal injury. In fact, the U.S. government notes that the universal use of existing seat belts could cut the highway death toll by 10,000 or more each year and could reduce disabling injuries by two million annually. In a rollover crash, an unbelted person is significantly more likely to die than a person wearing a seat belt. Always buckle up.

HOW TO USE THIS MANUAL

Essential Information

Consult the Table of Contents to determine which section contains the information you desire.

Since the specification of your vehicle depends on the items of equipment ordered, certain descriptions and illustrations may differ from your vehicle's equipment.

The detailed index at the back of this Owner's Manual contains a complete listing of all subjects.

Symbols

Consult the following table for a description of the symbols that may be used on your vehicle or throughout this Owner's Manual:

WARNINGS AND CAUTIONS

This Owner's Manual contains **WARNINGS** against operating procedures that could result in a collision, bodily injury and/or death. It also contains **CAUTIONS** against procedures that could result in damage to your vehicle. If you do not read this entire Owner's Manual, you may miss important information. Observe all Warnings and Cautions.

VEHICLE MODIFICATIONS/ALTERATIONS

WARNING!

Any modifications or alterations to this vehicle could seriously affect its roadworthiness and safety and may lead to a collision resulting in serious injury or death.

GRAPHICAL TABLE OF CONTENTS

CONTENTS

- FRONT VIEW 10
- REAR VIEW. 11
- INSTRUMENT PANEL 12
- INTERIOR 13

FRONT VIEW

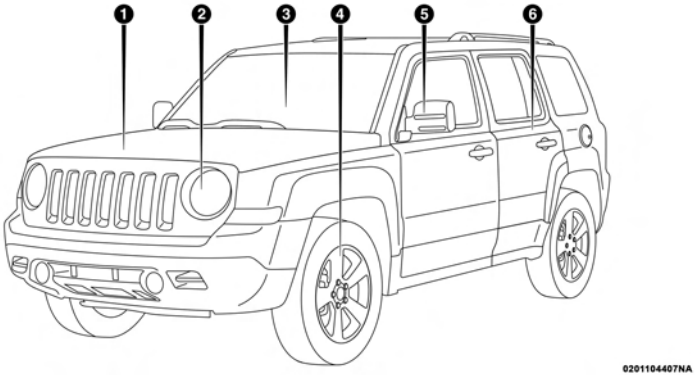

Front View

1 — Hood/Engine Compartment
2 — Headlights
3 — Windshield
4 — Wheels/Tires
5 — Exterior Mirrors
6 — Doors

REAR VIEW

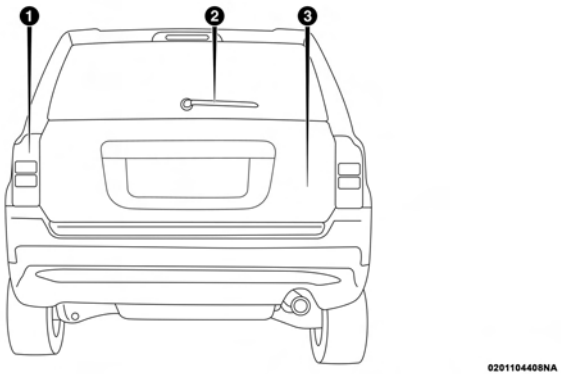

Rear View

1 — Rear Lights
2 — Rear Windshield Wiper
3 — Liftgate

INSTRUMENT PANEL

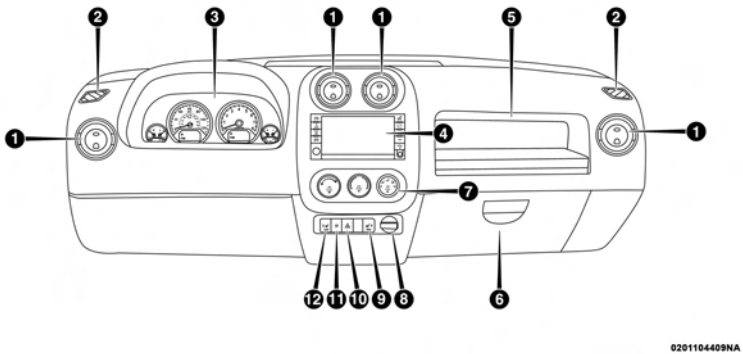

Instrument Panel

1 — Air Outlets
2 — Demisters
3 — Instrument Cluster
4 — Radio
5 — Storage Bin
6 — Glove Compartment
7 — Climate Controls
8 — Power Outlet
9 — Heated Seat Switch – If Equipped
10 — Hazard Warning Flasher
11 — ESC OFF Switch – If Equipped
12 — Heated Seat Switch – If Equipped

INTERIOR

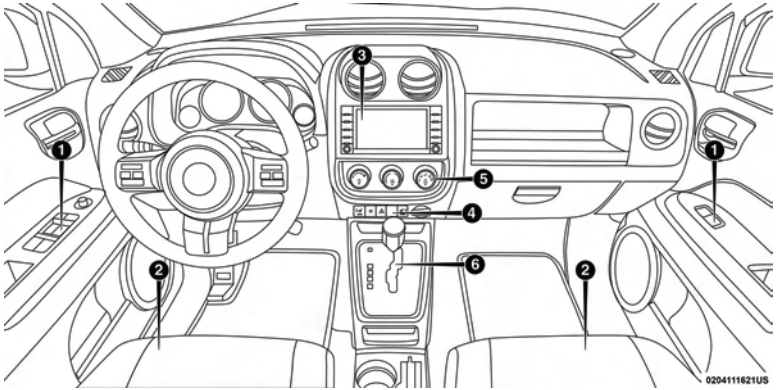

Interior Features

1 — Power Window Switches
2 — Seats
3 — Radio
4 — Switch Panel
5 — Climate Controls
6 — Transmission Gear Selector

GETTING TO KNOW YOUR VEHICLE

CONTENTS

■ KEYS 19
- □ A Word About Your Keys 19
- □ Locking Doors With A Key 19
- □ To Unlock The Doors And Liftgate 19
- □ Key Fob Unlock, Driver Door/All First Press 20
- □ Programming Additional Key Fobs 20
- □ Key Fob Battery Replacement 20
- □ General Information 21

■ IGNITION SWITCH 21
- □ Ignition Key Removal 21
- □ Key Fob-In-Ignition Reminder 23

■ REMOTE STARTING SYSTEM — IF EQUIPPED . . .23
- □ How To Use Remote Start. 23
- □ Remote Start Abort Message Display 24
- □ To Enter Remote Start 24
- □ To Exit Remote Start Mode Without Driving The Vehicle 25
- □ To Exit Remote Start Mode And Drive The Vehicle 25

■ SENTRY KEY 25
- □ Replacement Key Fobs 26
- □ Customer Key Programming 26
- □ General Information 27

■ VEHICLE SECURITY ALARM — IF EQUIPPED . . .28
- □ To Arm The System 28
- □ Rearming The System 28
- □ To Disarm The System 28
- □ Vehicle Security Alarm Manual Override 29

■ DOOR LOCKS 29

- Manual Door Locks 29
- Power Door Locks 30
- Child-Protection Door Lock System — Rear Doors 32

■ SEATS 34
- Manual Seats. 34
- Power Seats — If Equipped 36
- Heated Seats — If Equipped 38
- Folding Rear Seat 39
- Reclining Rear Seat — If Equipped 40

■ HEAD RESTRAINTS 40
- Supplemental Active Head Restraints — Front Seats 41
- Rear Head Restraints 43

■ STEERING WHEEL 43
- Tilt Steering Column 43

■ MIRRORS 44
- Inside Day/Night Mirror 44
- Automatic Dimming Mirror — If Equipped 44
- Outside Mirror — Driver Side 45
- Outside Mirror — Passenger Side 45
- Folding Outside Mirrors 45
- Power Mirrors 46
- Heated Mirrors — If Equipped 46
- Vanity Mirrors — If Equipped 46
- Sun Visor “Slide-On-Rod” Feature — If Equipped 47

■ EXTERIOR LIGHTS 47
- Headlights And Parking Lights 47
- Daytime Running Lights — If Equipped 47
- High/Low Beam Switch 47
- Flash-To-Pass 47
- Automatic Headlights — If Equipped 48
- Fog Lights — If Equipped 48
- Turn Signals 49

- Lights-On Reminder 49
- Headlights On With Wipers (Available With Automatic Headlights Only) 49

■ INTERIOR LIGHTS 50
- Instrument Panel Dimming. 50
- Map/Reading Lights 50

■ WINDSHIELD WIPERS AND WASHERS 51
- Windshield Wiper Operation. 52
- Intermittent Wiper System 52
- Windshield Washers 53
- Headlights On With Wipers (Available With Automatic Headlights Only) 53
- Mist Feature 54
- Rear Window Wiper/Washer 54

■ CLIMATE CONTROLS 55
- Manual Climate Controls 55
- Automatic Climate Controls 59
- Automatic Temperature Control (ATC) — If Equipped 64
- Operating Tips 65

■ POWER WINDOWS — IF EQUIPPED 68
- Power Window Switches 68
- Auto-Down. 69
- Window Lockout Switch. 69

■ POWER SUNROOF — IF EQUIPPED 70
- Opening 70
- Closing 71
- Wind Buffeting 71
- Sunshade Operation. 71
- Pinch Protect Feature 72
- Sunroof Maintenance 72
- Ignition Off Operation 72

■ TO OPEN AND CLOSE THE HOOD 72

■ LIFTGATE 74

- Cargo Area Features 75

■ GARAGE DOOR OPENER — IF EQUIPPED 78

- Before You Begin Programming HomeLink 79
- Programming A Rolling Code 79
- Programming A Non-Rolling Code 81
- Canadian/Gate Operator Programming 82
- Using HomeLink 83
- Security 83
- Troubleshooting Tips 84
- General Information. 84

■ CONSOLE FEATURES 85

■ INTERNAL EQUIPMENT 86

- Glove Compartment And Storage Bin 86
- Door Storage. 87
- Electrical Power Outlets 88
- Power Inverter — If Equipped 90
- Cupholders 91

■ ROOF LUGGAGE RACK — IF EQUIPPED 92

KEYS

Your vehicle uses a keyless ignition system. The ignition system consists of a key fob with Remote Keyless Entry (RKE) and a START/STOP push button ignition system. The Remote Keyless Entry system consists of a key fob and Keyless Enter-N-Go feature.

NOTE: The key fob may not be found if it is located next to a mobile phone, laptop or other electronic device; these devices may block the key fob's wireless signal.

A Word About Your Keys

The authorized dealer that sold you your new vehicle has the key code numbers for your vehicle locks. These numbers can be used to order duplicate Remote Keyless Entry (RKE) key fobs. Ask your authorized dealer for these numbers and keep them in a safe place.

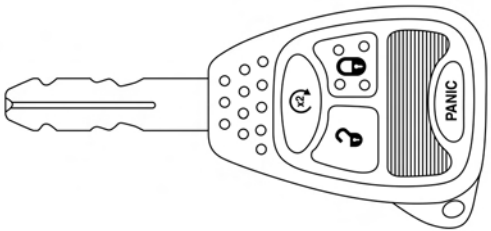

0301103302NA

Key Fob

Locking Doors With A Key

You can insert the key with either side up. To lock the door, turn the key to the right. To unlock the door, turn the key to the left. Refer to "Body Lubrication" in Dealer Service" in "Servicing And Maintenance" for further information.

To Unlock The Doors And Liftgate

Push and release the unlock button on the key fob once to unlock the driver's door or twice within five seconds to unlock all doors and liftgate. The turn signal lights will flash to acknowledge the unlock signal. The illuminated entry system will also turn on.

Key Fob Unlock, Driver Door/All First Press

This feature lets you program the system to unlock either the driver's door or all doors on the first push of the unlock button on the key fob. To change the current setting, proceed as follows:

- For vehicles equipped with the instrument cluster display, refer to "Instrument Cluster Display/Personal Settings (Customer-Programmable Features)" in "Getting To Know Your Instrument Panel" for further information.
- For vehicles not equipped with the instrument cluster display, perform the following steps:
  1. Push and hold the lock button on a programmed key fob for at least four seconds but no longer than ten seconds. Then, push and hold the unlock button while still holding the lock button.
  2. Release both buttons at the same time.
  3. Test the feature while outside of the vehicle by pushing the lock/unlock buttons on the key fob with the ignition in the lock position and the key fob removed.
  4. Repeat these steps if you want to return this feature to its previous setting.

NOTE: Pushing the lock button on the key fob while you are inside the vehicle will activate the vehicle security alarm. Opening a door with the vehicle security alarm activated will cause the alarm to sound. Push the unlock button to deactivate the vehicle security alarm.

Programming Additional Key Fobs

Refer to "Sentry Key" in this section for further information.

If you do not have a programmed key fob, contact your authorized dealer for details.

Key Fob Battery Replacement

NOTE: Perchlorate Material – special handling may apply. See www.dtsc.ca.gov/hazardouswaste/perchlorate

The recommended replacement battery is CR2032.

1. If the key fob is equipped with a screw, remove the screw. With the key fob buttons facing down, use a flat blade screwdriver to pry the two halves of the key fob apart. Make sure not to damage the elastomer seal during removal.

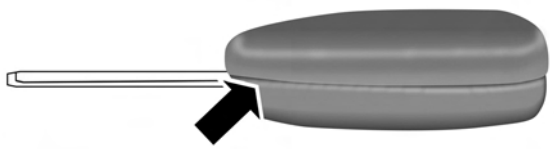

0301103303NA

Separating Case Halves

2. Remove and replace the battery. Avoid touching the new battery with your fingers. Skin oils may cause battery deterioration. If you touch a battery, clean it with rubbing alcohol.
3. To reassemble the key fob case, snap the two halves together.

NOTE: If the key fob is equipped with a screw, reinstall and tighten the screw until snug.

General Information

The following regulatory statement applies to all Radio Frequency (RF) devices equipped in this vehicle:

This device complies with Part 15 of the FCC Rules and with Industry Canada license-exempt RSS standard(s). Operation is subject to the following two conditions:

1. This device may not cause harmful interference, and
2. This device must accept any interference received, including interference that may cause undesired operation.

NOTE: Changes or modifications not expressly approved by the party responsible for compliance could void the user's authority to operate the equipment.

IGNITION SWITCH

Ignition Key Removal

1. Place the gear selector in PARK (if equipped with an automatic transmission).
2. Place the ignition in the ACC (Accessory) position.
3. Push the key and cylinder inward and rotate the key to the LOCK position.

4. Remove the key from the ignition.

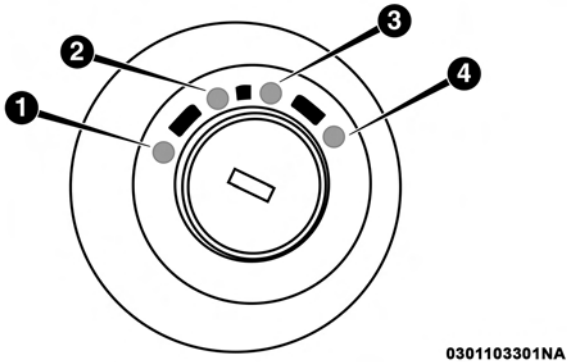

Ignition Positions

1 — LOCK
2 — ACC (ACCESSORY)
3 — ON/RUN
4 — START

NOTE: If you try to remove the key before you place the gear selector in PARK, the key may become trapped temporarily in the ignition. If this occurs, place the gear selector in PARK, rotate the key clockwise slightly, and then remove the key as described above. If a malfunction occurs, the system will trap the key in the ignition to warn you that this safety feature is inoperable. The engine can be started and stopped but the key cannot be removed until you obtain service.

WARNING!

- **Before exiting a vehicle, always shift the automatic transmission into PARK or the manual transmission into FIRST gear or REVERSE, apply the parking brake, turn the engine OFF, remove the key fob from the ignition and lock your vehicle.**
- **Never leave children alone in a vehicle, or with access to an unlocked vehicle.**
- **Allowing children to be in a vehicle unattended is dangerous for a number of reasons. A child or others could be seriously or fatally injured. Children should be warned not to touch the parking brake, brake pedal or the gear selector.**

(Continued)

WARNING! *(Continued)*

- **Do not leave the key fob in or near the vehicle, or in a location accessible to children. A child could operate power windows, other controls, or move the vehicle.**
- **Do not leave children or animals inside parked vehicles in hot weather. Interior heat build-up may cause serious injury or death.**

CAUTION!

Always remove the key fobs from the vehicle and lock all doors when leaving the vehicle unattended.

Key Fob-In-Ignition Reminder

Opening the driver's door when the key is in the ignition and the ignition position is LOCK or ACC sounds a signal to remind you to remove the key.

NOTE: With the driver's door open and the key in the ignition, the power door locks will not lock, and key fob will not function.

REMOTE STARTING SYSTEM — IF EQUIPPED

This system uses the key fob to remote start the engine conveniently from outside the vehicle, while still maintaining security. The system has a range of approximately 328 ft (100 m). Obstructions between the vehicle and key fob may reduce this range.

NOTE:

- The vehicle must be equipped with an automatic transmission to be equipped with Remote Start.
- Obstructions between the vehicle and the key fob may reduce this range.

How To Use Remote Start

All of the following conditions must be met before the engine will remote start:

- Gear selector in PARK
- Doors closed
- Hood closed
- Hazard switch off
- Brake switch inactive (brake pedal not pushed)

- Ignition key removed from ignition
- Battery at an acceptable charge level
- PANIC button not pushed
- System not disabled from previous remote start event
- Vehicle security alarm not active

WARNING!

- **Do not start or run an engine in a closed garage or confined area. Exhaust gas contains Carbon Monoxide (CO) which is odorless and colorless. Carbon Monoxide is poisonous and can cause serious injury or death when inhaled.**
- **Keep key fobs away from children. Operation of the Remote Start System, windows, door locks or other controls could cause serious injury or death.**

Remote Start Abort Message Display

The following messages will display if the vehicle fails to remote start or exits remote start prematurely:

- Remote Start Aborted — Door Open
- Remote Start Aborted — Hood Open
- Remote Start Aborted — L/Gate Open
- Remote Start Aborted — Fuel Low
- Remote Start Aborted — System Fault

The message stays active until the ignition is placed in the ON/RUN position.

To Enter Remote Start

Push and release the Remote Start button on the key fob twice within five seconds. The vehicle doors will lock, the parking lights will flash, and the horn will chirp twice (if programmed). Then, the engine will start and the vehicle will remain in the Remote Start mode for a 15-minute cycle.

NOTE:

- The park lamps will turn on and remain on during Remote Start mode.
- For security, power window and power sunroof operation (if equipped) are disabled when the vehicle is in the Remote Start mode.
- If your power door locks were unlocked, Remote Start will automatically lock the doors.
- The engine can be started two consecutive times (two 15-minute cycles) with the key fob. However, the ignition must be placed in the ON/RUN position before you can repeat the start sequence for a third cycle.

Remote Start will also cancel if any of the following occur:

- The engine stalls or RPM exceeds 2500.
- Any engine warning lamps come on.
- Low Fuel Light turns on.
- The hood is opened.
- The hazard switch is pushed.
- The transmission is moved out of PARK.
- The brake pedal is pushed.

To Exit Remote Start Mode Without Driving The Vehicle

Push and release the Remote Start button one time or allow the engine to run for the entire 15-minute cycle.

NOTE: To avoid unintentional shut downs, the system will disable the one time push of the Remote Start button for two seconds after receiving a valid Remote Start request.

To Exit Remote Start Mode And Drive The Vehicle

Before the end of the 15-minute cycle, push and release the unlock button on the key fob to unlock the doors and disarm the vehicle security alarm (if equipped). Then, insert the key into the ignition and place the ignition in the ON/RUN position.

NOTE: The ignition must be placed in the ON/RUN position in order to drive the vehicle.

SENTRY KEY

The Sentry Key Immobilizer System prevents unauthorized vehicle operation by disabling the engine. The system does not need to be armed or activated. Operation is automatic, regardless of whether the vehicle is locked or unlocked.

The system uses key fobs that have an embedded electronic chip (transponder) to prevent unauthorized vehicle operation. Therefore, only key fobs that are programmed to the vehicle can be used to start and operate the vehicle. The system will shut the engine off in two seconds if someone uses an invalid key to try to start the engine.

NOTE: A key fob that has not been programmed is also considered an invalid key, even if it is cut to fit the ignition or lock cylinder for that vehicle.

During normal operation, after placing the ignition in the on position, the vehicle security light will turn on for three

seconds for a bulb check. If the light remains on after the bulb check, it indicates that there is a problem with the electronics. In addition, if the vehicle security light begins to flash after the bulb check, it indicates that someone used an invalid key to try to start the engine. Either of these conditions will result in the engine being shut off after two seconds.

If the vehicle security light turns on during normal vehicle operation (vehicle running for longer than ten seconds), it indicates that there is a fault in the electronics. Should this occur, have the vehicle serviced as soon as possible by an authorized dealer.

CAUTION!

The Sentry Key Immobilizer system is not compatible with some aftermarket remote starting systems. Use of these systems may result in vehicle starting problems and loss of security protection.

All of the key fobs provided with your new vehicle have been programmed to the vehicle electronics.

Replacement Key Fobs

NOTE: Only key fobs that are programmed to the vehicle electronics can be used to start and operate the vehicle. Once a key fob is programmed to a vehicle, it cannot be programmed to any other vehicle.

CAUTION!

Always remove the Sentry Keys from the vehicle and lock all doors when leaving the vehicle unattended.

Duplication of key fobs may be performed at an authorized dealer or by following the customer key programming procedure. This procedure consists of programming a blank key fob to the vehicle electronics. A blank key fob is one that has never been programmed.

NOTE: When having the Sentry Key Immobilizer System serviced, bring all vehicle key fobs with you to an authorized dealer.

Customer Key Programming

If you have two valid key fobs, you can program new key fobs to the Sentry Key Immobilizer system by performing the following procedure:

1. Cut the additional key(s) to match the ignition and lock cylinder key code.
2. Insert the first valid key into the ignition. Place the ignition in the ON/RUN position for at least three seconds, but no longer than 15 seconds. Then, place the ignition in the LOCK position and remove the first key.
3. Insert the second valid key into the ignition. Place the ignition in the ON/RUN position within 15 seconds. After 10 seconds, a chime will sound. In addition, the Vehicle Security Light will begin to flash. Place the ignition in the LOCK position and remove the second key.
4. Insert a blank key into the ignition. Place the ignition in the ON/RUN position within 60 seconds. After 10 seconds, a single chime will sound. In addition, the Vehicle Security Light will stop flashing. To indicate that programming is complete, the Vehicle Security Light will turn on again for three seconds and then turn off.

The new key is programmed. **The key fob will also be programmed during this procedure.**

Repeat this procedure to program up to eight keys. If you do not have a programmed key fob, contact your authorized dealer for details.

NOTE: If a programmed key fob is lost, see your authorized dealer to have all remaining key fobs erased from the system's memory. This will prevent the lost key from starting your vehicle. The remaining key fobs must then be reprogrammed. All vehicle key fobs must be taken to an authorized dealer at the time of service to be reprogrammed.

General Information

The following regulatory statement applies to all radio frequency (RF) devices equipped in this vehicle:

This device complies with Part 15 of the FCC Rules and with Industry Canada license-exempt RSS standard(s). Operation is subject to the following two conditions:

1. This device may not cause harmful interference, and
2. This device must accept any interference received, including interference that may cause undesired operation.

NOTE: Changes or modifications not expressly approved by the party responsible for compliance could void the user's authority to operate the equipment.

VEHICLE SECURITY ALARM — IF EQUIPPED

This vehicle security alarm monitors the doors, liftgate, and ignition switch for unauthorized operation.

When the alarm is activated, the interior switches for door locks are disabled. The vehicle security alarm provides both audio and visual signals, the horn will sound, the headlights, park lamps and/or turn signals will flash repeatedly for three minutes. If the disturbance is still present (driver's door, passenger door, other doors, ignition) after three minutes, the parking lights and tail lights will flash for an additional 15 minutes.

To Arm The System

1. Remove the key fob from the ignition and get out of the vehicle.
2. Lock the door using either the power door lock switch or the key fob lock button and close all doors.
3. The vehicle security light in the instrument cluster will flash rapidly for approximately 16 seconds. This shows that the vehicle security alarm is arming. During this period, if a door is opened, the ignition is placed in the ON/RUN position, or the power door locks are unlocked in any manner, the vehicle security alarm will automatically disarm. After approximately 16 seconds, the vehicle security light will flash slowly. This shows that the vehicle security alarm is fully armed.

Rearming The System

If something triggers the alarm, and no action is taken to disarm it, the vehicle security alarm will turn off the horn after three minutes, turn off all of the visual signals after 15 minutes, and then the vehicle security alarm will rearm itself.

To Disarm The System

Push unlock on the key fob, or insert the key into the ignition and place the ignition in the ON/RUN position.

If something has triggered the vehicle security alarm in your absence, the horn will sound three times, and exterior lights blink three times when you unlock the doors. Check the vehicle for tampering. The vehicle security alarm is designed to protect your vehicle. However, you can create conditions where the vehicle security alarm will arm unexpectedly. If you remain in the vehicle and lock the doors with the key fob, once the vehicle security alarm is armed (after 16 seconds), when you pull the door handle to exit, the alarm will sound. If this occurs, push the unlock button on the key fob to disarm the vehicle security alarm.

Vehicle Security Alarm Manual Override

The vehicle security alarm will not arm if you lock the doors using the manual door lock plunger.

DOOR LOCKS

Manual Door Locks

Use the manual door lock knob to lock the doors from inside the vehicle. If the lock knob is down when the door is closed, the door will lock. Make sure the keys are not inside the vehicle before closing the door.

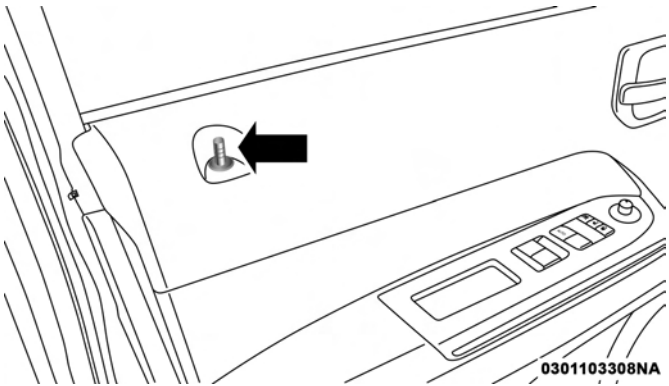

Manual Door Lock Knob

WARNING!

- **For personal security and safety in the event of an collision, lock the vehicle doors as you drive as well as when you park and leave the vehicle.**
- **Never leave children alone in a vehicle, or with access to an unlocked vehicle. Allowing children to be in a vehicle unattended is dangerous for a number of reasons. A child or others could be seriously or fatally injured. Children should be warned not to touch the parking brake, brake pedal or the gear selector.**
- **Do not leave the key fob in or near the vehicle, or in a location accessible to children. A child could operate power windows, other controls, or move the vehicle.**

CAUTION!

Always remove the key fobs from the vehicle and lock all doors when leaving the vehicle unattended.

Power Door Locks

A power door lock switch is located on the driver's and front passenger's door panel. Push these switches to lock or unlock the doors and liftgate.

NOTE: To prevent from locking the key in the vehicle, the power door lock switch will not operate when the key is in the ignition and either front door is open. A chime will sound as a reminder to remove the key.

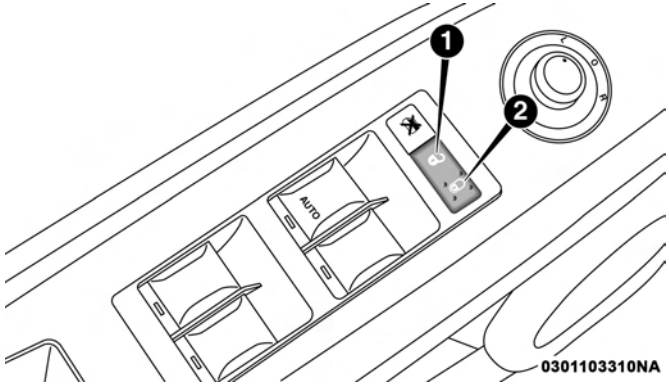

Driver Power Door Lock Switch

1 — Unlock Doors And Liftgate
2 — Lock Doors And Liftgate

Auto Lock Doors — If Equipped

The Automatic Door Lock feature default condition is enabled. When enabled, the door locks will lock automatically when the vehicle's speed exceeds 15 mph (24 km/h).

Auto Lock Doors Programming

The Automatic Door Lock feature can be enabled or disabled as follows:

- For vehicles equipped with the instrument cluster display, refer to "Instrument Cluster Display — If Equipped/Personal Settings (Customer Programmable Features)" in "Getting To Know Your Instrument Panel" for further information.
- For vehicles not equipped with the instrument cluster display, perform the following procedure:
  1. Close all doors and place the key in the ignition.
  2. Within 15 seconds, place the ignition between LOCK and ON/RUN and then back to LOCK four times, ending up in the LOCK position (do not start the engine).
  3. Within 30 seconds, push the power door lock switch to lock the doors.
  4. A single chime will indicate the completion of the programming.
  5. Repeat these steps if you want to return this feature to its previous setting.

NOTE:

- If you do not hear the chime, it means that the system did not enter the programming mode and you will need to repeat the procedure.
- Use the Automatic Door Lock feature in accordance with local laws.

Automatic Unlock Doors On Exit

The doors will unlock automatically if:

- The Automatic Unlock Doors On Exit feature is enabled.
- The transmission was in gear, and the vehicle speed returned to 0 MPH (0 km/h).
- The transmission is in NEUTRAL or PARK.
- The driver's door is opened.
- The doors were not previously unlocked.

Automatic Unlock Doors On Exit Programming

The Automatic Unlock Doors On Exit feature can be enabled or disabled as follows:

- For vehicles equipped with the instrument cluster display, refer to "Instrument Cluster Display — If

Equipped/Personal Settings (Customer-Programmable Features)" in "Getting To Know Your Instrument Panel" for further information.

- For vehicles not equipped with the instrument cluster display, perform the following procedure:

  1. Close all doors and place the key in the ignition.
  2. Within 15 seconds, place the ignition between LOCK and ON/RUN and then back to LOCK five times, ending up in the ON/RUN position (do not start the engine).
  3. Within 30 seconds, push the power door unlock switch to unlock the doors.
  4. A single chime will indicate the completion of the programming.
  5. Repeat these steps if you want to return this feature to its previous setting.

NOTE:

- If you do not hear the chime, it means that the system did not enter the programming mode and you will need to repeat the procedure.
- Use the Automatic Unlock Doors On Exit feature in accordance with local laws.

Child-Protection Door Lock System — Rear Doors

To provide a safer environment for small children riding in the rear seats, the rear doors are equipped with Child-Protection Door Lock system.

To Engage Or Disengage The Child-Protection Door Lock System

1. Open the rear door.
2. Insert the tip of the ignition key into the lock and rotate to the lock or unlock position.

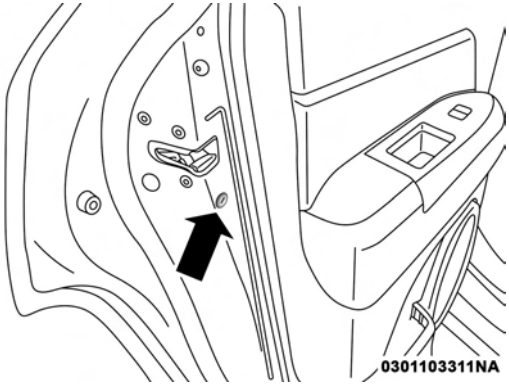

Child-Protection Door Lock Location

3. Repeat steps 1 and 2 for the opposite rear door.

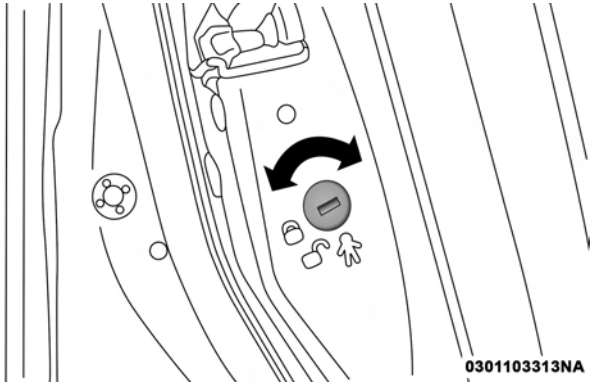

Child-Protection Door Lock Function

WARNING!

Avoid trapping anyone in a vehicle in a collision. Remember that the rear doors can only be opened from the outside when the Child-Protection locks are engaged.

NOTE: For emergency exit with the system engaged, move the lock knob up (unlocked position), roll down the window, and open the door with the outside door handle.

SEATS

Seats are a part of the Occupant Restraint System of the vehicle.

WARNING!

- **It is dangerous to ride in a cargo area, inside or outside of a vehicle. In a collision, people riding in these areas are more likely to be seriously injured or killed.**
- **Do not allow people to ride in any area of your vehicle that is not equipped with seats and seat belts. In a collision, people riding in these areas are more likely to be seriously injured or killed.**
- **Be sure everyone in your vehicle is in a seat and using a seat belt properly.**

Manual Seats

Manual Front Seat Adjustment

On models equipped with manual seats, the adjusting bar is located at the front of the seats, near the floor. While sitting in the seat, lift up on the bar and move the seat forward or rearward. Release the bar once you have reached the desired position. Then, using body pressure, move forward and rearward on the seat to be sure that the seat adjusters have latched.

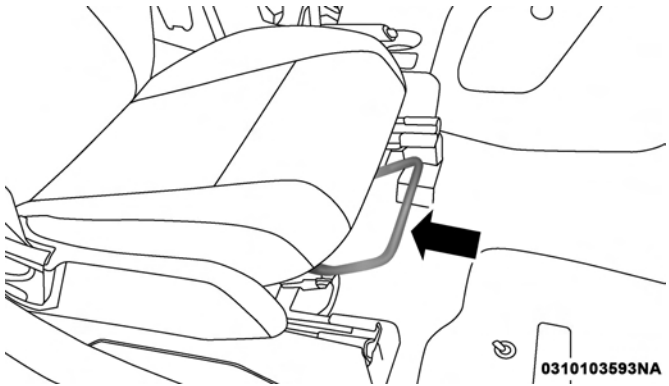

Manual Seat Adjusting Bar

WARNING!

- **Adjusting a seat while driving may be dangerous. Moving a seat while driving could result in loss of control which could cause a collision and serious injury or death.**
- **Seats should be adjusted before fastening the seat belts and while the vehicle is parked. Serious injury or death could result from a poorly adjusted seat belt.**

Manual Seat Height Adjustment — If Equipped

The driver's seat height can be raised or lowered by using a lever, located on the outboard side of the seat. Pull upward on the lever to raise the seat height or push downward on the lever to lower the seat height.

Seat Height Adjustment Lever

Manual Lumbar — If Equipped

The lumbar adjustment handle is located on the inboard or outboard side of the seatback. Rotate the lever downward to increase the lumbar support or rotate the lever upward to decrease the lumbar support.

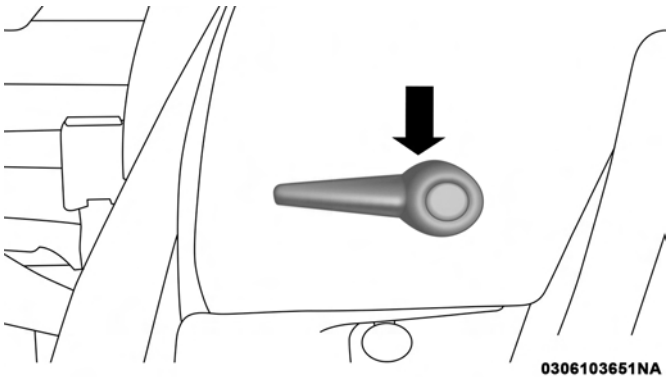

Outboard Lumbar Adjustment Lever

Driver's Seatback Recline

To adjust the seatback, lift the lever located on the outboard side of the seat, lean back to the desired angle and release the lever. To return the seatback, lift the lever, lean forward and release the lever.

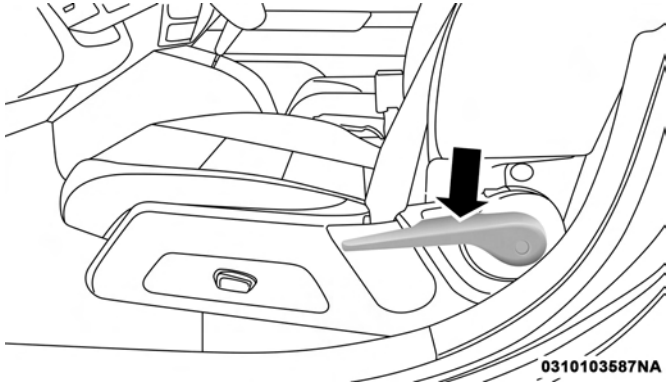

Recline Lever

WARNING!

Do not ride with the seatback reclined so that the shoulder belt is no longer resting against your chest. In a collision you could slide under the seat belt, which could result in serious injury or death.

Power Seats — If Equipped

Some models may be equipped with a power driver's seat. The power seat switch is located on the outboard side of the seat near the floor. Use the switch to move the seat up, down, forward, rearward, or to tilt the seat.

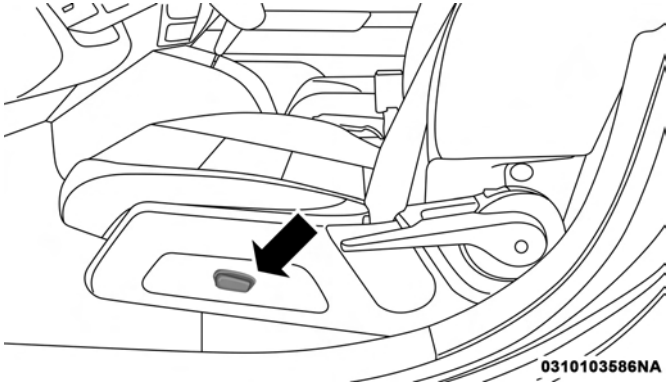

Power Seat Switch

WARNING!

- **Adjusting a seat while driving may be dangerous. Moving a seat while driving could result in loss of control which could cause a collision and serious injury or death.**
- **Seats should be adjusted before fastening the seat belts and while the vehicle is parked. Serious injury or death could result from a poorly adjusted seat belt.**

CAUTION!

Do not place any article under a power seat or impede its ability to move as it may cause damage to the seat controls. Seat travel may become limited if movement is stopped by an obstruction in the seat's path.

Adjusting The Seat Forward Or Rearward

The seat can be adjusted both forward and rearward. Push the seat switch forward or rearward. The seat will move in the direction of the switch. Release the switch when the desired position has been reached.

Adjusting The Seat Up Or Down

The height of the seats can be adjusted up or down. Pull upward or push downward on the seat switch. The seat will move in the direction of the switch. Release the switch when the desired position is reached.

Tilting The Seat Up Or Down

The angle of the seat cushion can be adjusted in four directions. Pull upward or push downward on the front or rear of the seat switch, the front or rear of the seat cushion will move in the direction of the switch. Release the switch when the desired position is reached.

Heated Seats — If Equipped

On some models, the front driver and passenger seats may be equipped with heaters in both the seat cushions and seatbacks. The controls for the front heated seats are located on the center instrument panel area.

You can choose from HI, LO or OFF heat settings. Amber indicator lights in each switch indicate the level of heat in use. Two indicator lights will illuminate for HI, one for LO and none for OFF.

Push the switch once to select HI-level heating. Push the switch a second time to select LO-level heating. Push the switch a third time to shut the heating elements OFF.

When the HI-level setting is selected, the heater will provide a boosted heat level during the initial stages of operation. Then, the heat output will drop to the normal HI-level. If the HI-level setting is selected, the system will automatically switch to LO-level after approximately 30 minutes of continuous operation. At that time, the display will change from HI to LO, indicating the change. When the LO-level heating is selected, the system automatically turns the heater and the indicator light OFF after approximately 30 minutes of continuous operation.

NOTE: Once a heat setting is selected, heat will be felt within two to five minutes.

WARNING!

- **Persons who are unable to feel pain to the skin because of advanced age, chronic illness, diabetes, spinal cord injury, medication, alcohol use, exhaustion or other physical condition must exercise care when using the seat heater. It may cause burns even at low temperatures, especially if used for long periods of time.**
- **Do not place anything on the seat or seatback that insulates against heat, such as a blanket or cushion. This may cause the seat heater to overheat. Sitting in a seat that has been overheated could cause serious burns due to the increased surface temperature of the seat.**

Folding Rear Seat

To provide additional storage area, each rear seatback can be folded forward. Pull the strap forward to fold the rear seatback flat.

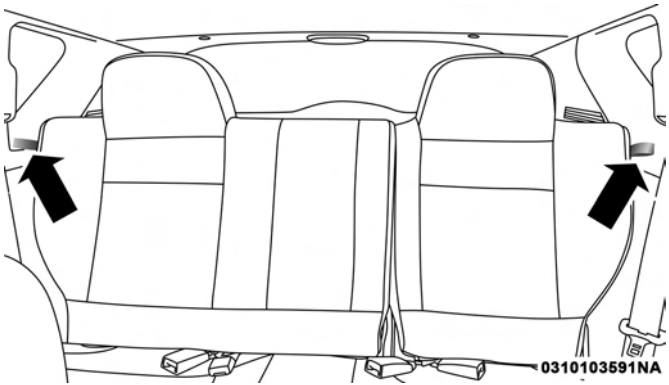

Rear Seat Release Straps

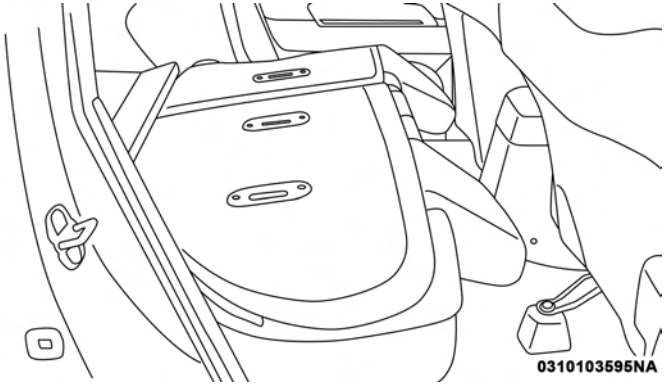

Folded Rear Seat

NOTE: You may experience deformation in the seat cushion from the seat belt buckles if the seats are left folded for an extended period of time. This is normal and by simply opening the seats to the open position, over time the seat cushion will return to its normal shape.

To raise the seatback, pull the strap forward and lift the seatback into its upright position.

WARNING!

Be certain that the seatback is securely locked into position. If the seatback is not securely locked into position the seat will not provide the proper stability for child seats and/or passengers. An improperly latched seat could cause serious injury.

Reclining Rear Seat — If Equipped

For additional comfort, pull the strap forward just enough to release the seatback latch. Then, push the seatback to a reclined position, approximately 35 degrees maximum, and release the strap.

WARNING!

Do not ride with the seatback reclined so that the shoulder belt is no longer resting against your chest. In a collision, you could slide under the seat belt and be seriously or even fatally injured. Use the recliner only when the vehicle is parked.

HEAD RESTRAINTS

Head restraints are designed to reduce the risk of injury by restricting head movement in the event of a rear impact. Head restraints should be adjusted so that the top of the head restraint is located above the top of your ear.

WARNING!

- **All occupants, including the driver, should not operate a vehicle or sit in a vehicle's seat until the head restraints are placed in their proper positions in order to minimize the risk of neck injury in the event of a crash.**
- **Head restraints should never be adjusted while the vehicle is in motion. Driving a vehicle with the head restraints improperly adjusted or removed could cause serious injury or death in the event of a collision.**

Supplemental Active Head Restraints — Front Seats

Active Head Restraints (AHRs) are passive, deployable components, and vehicles with this equipment cannot be readily identified by any markings, only through visual inspection of the head restraint. The head restraint will be split in two halves, with the front half being soft foam and trim, the back half being decorative plastic.

When AHRs deploy during a rear impact, the front half of the head restraint extends forward to minimize the gap between the back of the occupant's head and the AHR. This system is designed to help prevent or reduce the extent of injuries to the driver and front passenger in certain types of rear impacts. Refer to "Occupant Restraints" in "Safety" for further information.

To raise the head restraint, pull upward on the head restraint. To lower the head restraint, push the adjustment button located at the base of the head restraint and push downward on the head restraint.

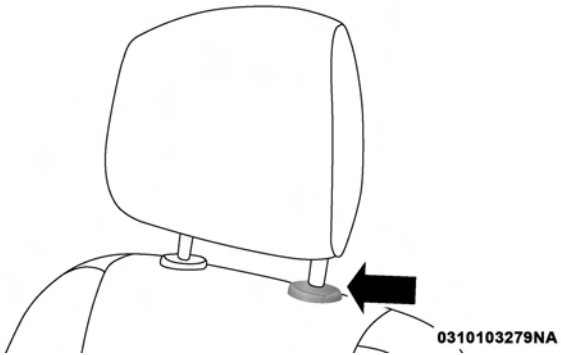

Adjustment Button

For comfort, the Active Head Restraints can be tilted forward and backward. To tilt the head restraint closer to the back of your head, pull forward on the bottom of the head restraint. Push rearward on the bottom of the head restraint to move the head restraint away from your head.

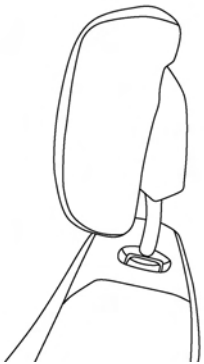

Active Head Restraint (Normal Position)

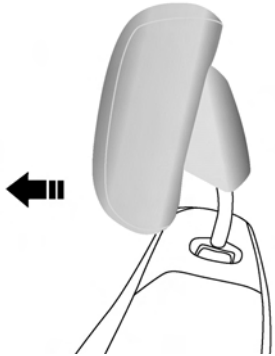

Active Head Restraint (Tilted Position)

NOTE:

- The head restraints should only be removed by qualified technicians, for service purposes only. If either of the head restraints require removal, see your authorized dealer.
- In the event of deployment of an Active Head Restraint, refer to “Occupant Restraints” in “Safety” for further information.

WARNING!

- **All occupants, including the driver, should not operate a vehicle or sit in a vehicle's seat until the head restraints are placed in their proper positions in order to minimize the risk of neck injury in the event of a collision.**
- **Do not place items over the top of the Active Head Restraint, such as coats, seat covers or portable DVD players. These items may interfere with the operation of the Active Head Restraint in the event of a collision and could result in serious injury or death.**
- **Active Head Restraints may be deployed if they are struck by an object such as a hand, foot or loose cargo. To avoid accidental deployment of the Active Head Restraint ensure that all cargo is secured, as loose cargo could contact the Active Head Restraint during sudden stops. Failure to follow this warning could cause personal injury if the Active Head Restraint is deployed.**

Rear Head Restraints

The head restraints in the rear are non adjustable. Refer to "Occupant Restraints" in "Safety" for information on Tether routing.

STEERING WHEEL

Tilt Steering Column

This feature allows you to tilt the steering column upward or downward. The tilt steering column lever is located on the left side of the steering column, below the turn signal lever.

Push down on the lever to unlock the steering column. With one hand firmly on the steering wheel, move the steering column up or down, as desired. Push the lever up to lock the steering column firmly in place.

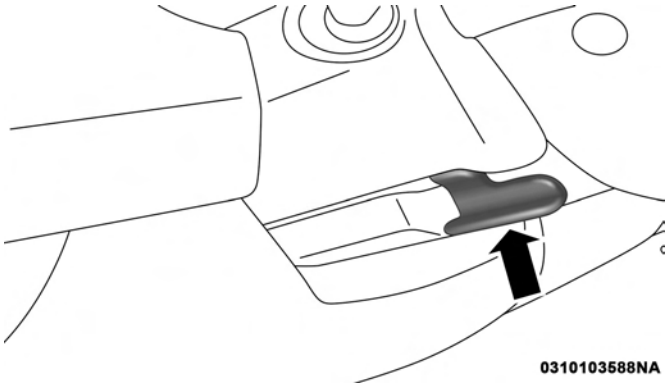

Tilt Steering Column Lever

WARNING!

Do not adjust the steering column while driving. Adjusting the steering column while driving or driving with the steering column unlocked, could cause the driver to lose control of the vehicle. Failure to follow this warning may result in serious injury or death.

MIRRORS

Inside Day/Night Mirror

A two-point pivot system allows for horizontal and vertical mirror adjustment. Adjust the mirror to center on the view through the rear window.

Headlight glare can be reduced by moving the small control under the mirror to the night position (toward the rear of vehicle). The mirror should be adjusted while set in the day position (toward the windshield).

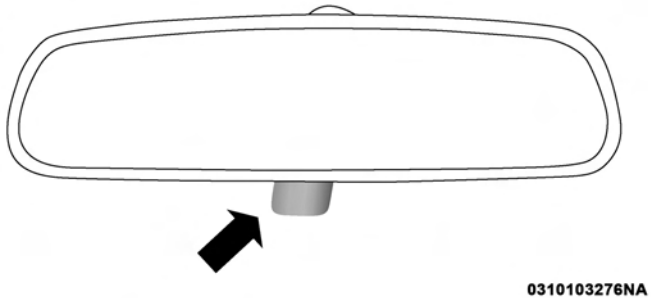

Inside Day/Night Mirror

Automatic Dimming Mirror — If Equipped

This mirror automatically adjusts for headlight glare from vehicles behind you. You can turn the feature on or off by pushing the button at the base of the mirror. The on/off symbol on the button will illuminate when the auto-dimming feature is enabled.

NOTE: This feature is disabled when the vehicle is moving in REVERSE.

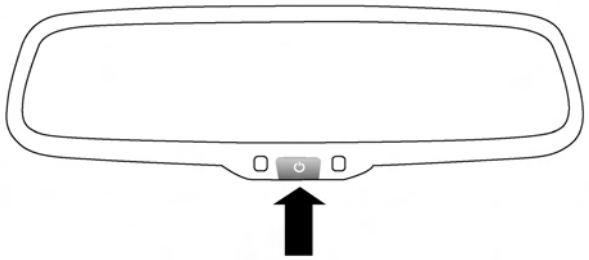

0310103273NA

Automatic Dimming Mirror

CAUTION!

To avoid damage to the mirror during cleaning, never spray any cleaning solution directly onto the mirror. Apply the solution onto a clean cloth and wipe the mirror clean.

Outside Mirror — Driver Side

Adjust the flat outside mirror so you can just see the side of your vehicle in the part of the mirror closest to the vehicle with your head close to the door glass.

Outside Mirror — Passenger Side

Adjust the convex outside mirror so you can just see the side of your vehicle in the part of the mirror closest to the vehicle with your head close to the center of the vehicle.

WARNING!

Vehicles and other objects seen in the passenger side convex mirror will look smaller and farther away than they really are. Relying too much on your passenger side convex mirror could cause you to collide with another vehicle or other object. Use your inside mirror when judging the size or distance of a vehicle seen in the passenger side convex mirror. Some vehicles will not have a convex passenger side mirror.

Folding Outside Mirrors

The outside mirrors are hinged and may be moved, manually, either forward or rearward to resist damage. The hinges have three detent positions; full forward, full rearward and normal.

Power Mirrors

The power mirror control is located on the driver's door trim panel.

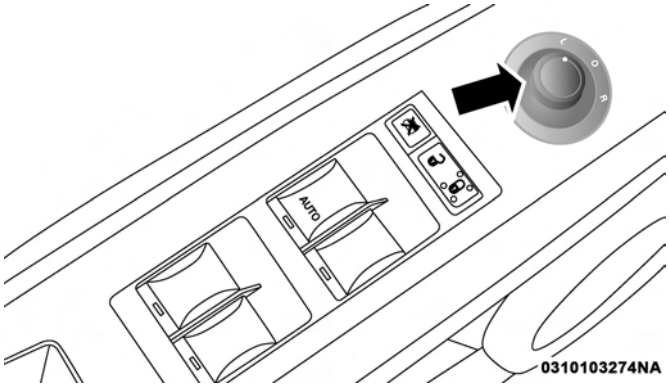

Power Mirror Control

To adjust a mirror, turn the control wand toward the left or right mirror positions indicated. Tilt the control wand in the direction you want the mirror to move.

When you are finished adjusting the mirror, turn the control to the center position to prevent accidentally moving a mirror.

Heated Mirrors — If Equipped

These mirrors are heated to melt frost or ice. This feature is activated whenever you turn on the rear window defroster. Refer to "Climate Controls" in "Getting To Know Your Vehicle" for further information.

Vanity Mirrors — If Equipped

To use the vanity mirror, rotate the sun visor down and swing the mirror cover upward.

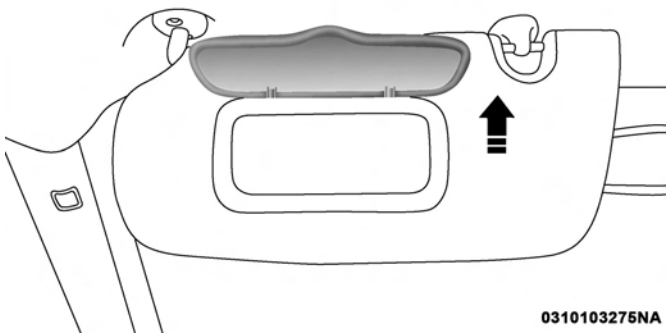

Vanity Mirror

Sun Visor “Slide-On-Rod” Feature — If Equipped

The sun visors may be extended out to provide more coverage of the side glass.

EXTERIOR LIGHTS

Headlights And Parking Lights

Turn the end of the multifunction lever to the first detent to turn on the parking lights. Turn the end of the lever to the second detent to turn on the headlights.

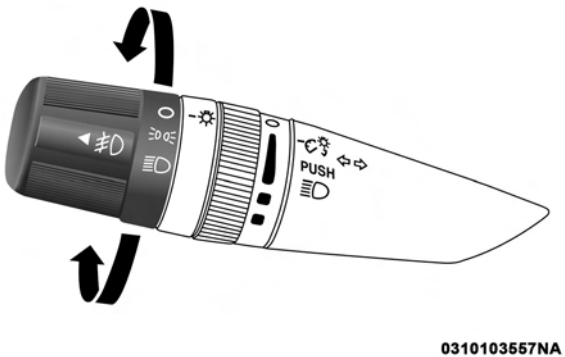

Headlight Control

Daytime Running Lights — If Equipped

The high beam lights will come on as Daytime Running Lights (lower intensity) whenever the ignition is ON, the engine is running, the headlight switch is off, the parking brake is off, the turn signal is off and the gear selector is in any position except PARK.

High/Low Beam Switch

Push the multifunction lever away from you to switch the headlights to high beam. Pull the multifunction lever toward you to switch the headlights back to low beam.

Flash-To-Pass

You can signal another vehicle with your headlights by lightly pulling the multifunction lever toward you. This will turn on the high beam headlights until the lever is released.

NOTE: If the multifunction lever is held in the flash-to-pass position for more than 20 seconds, the high beams will shut off. If this occurs, wait 30 seconds for the next flash-to-pass operation.

Automatic Headlights — If Equipped

Turning the end of the multifunction lever to the third detent (AUTO), will activate the automatic headlight system.

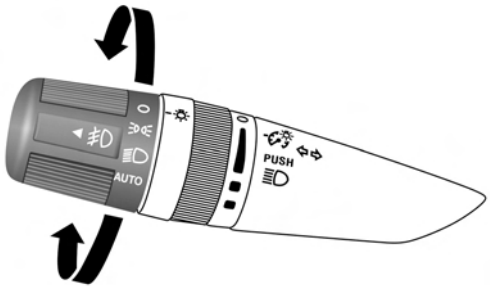

0310103561NA

Headlight Switch

With the engine running and the multifunction lever in the AUTO position, the headlights will turn on and turn off based on the surrounding light levels.

Fog Lights — If Equipped

The front fog light switch is on the multifunction lever. To activate the front fog lights, turn on the parking lights or the low beam headlights and pull out the end of the multifunction lever.

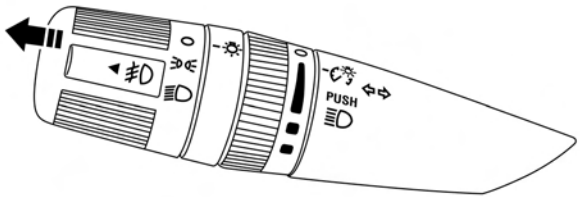

0310103559NA

Front Fog Light Operation

NOTE: The fog lights will only operate with the headlights on low beam. Selecting high beam headlights will turn off the fog lights.

Turn Signals

Move the multifunction lever up or down and the arrows on each side of the instrument cluster flash to show proper operation of the front and rear turn signal lights.

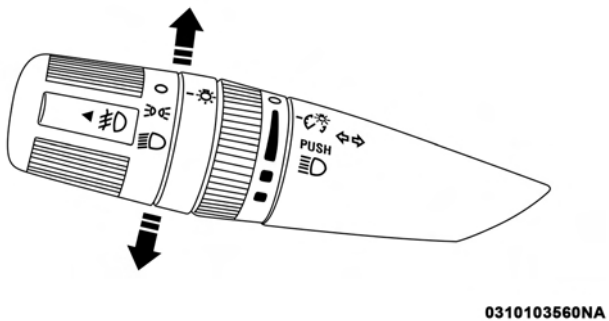

Turn Signal Operation

NOTE: If either light remains on and does not flash, or there is a very fast flash rate, check for a defective outside light bulb. If an indicator fails to light when the lever is moved, it would suggest that the indicator bulb is defective.

Lane Change Assist

Tap the lever up or down once, without moving beyond the detent, and the turn signal (right or left) will flash three times. Then, the turn signal (right or left) will automatically turn off.

Lights-On Reminder

If the headlights or parking lights are left on after the ignition is turned OFF, a chime will sound to alert the driver when the driver's door is opened.

Headlights On With Wipers (Available With Automatic Headlights Only)

When this feature is active, the headlights will turn on approximately 10 seconds after the wipers are turned on if the headlight switch is placed in the AUTO position. In addition, the headlights will turn off when the wipers are turned off if they were turned on by this feature.

NOTE: The Headlights On with Wipers feature can be turned on or off using the instrument cluster display. Refer to "Instrument Cluster Display" in "Getting To Know Your Instrument Panel" for further information.

INTERIOR LIGHTS

Instrument Panel Dimming

Rotate the center portion of the lever to the extreme bottom position to fully dim the instrument panel lights and prevent the interior lights from illuminating when a door is opened.

Rotate the center portion of the lever up to increase the brightness of the instrument panel lights when the parking lights or headlights are on.

Rotate the center portion of the lever upward to the next detent position to brighten the odometer and radio when the parking lights or headlights are on.

Rotate the center portion of the lever upward to the last detent to turn on the interior lighting.

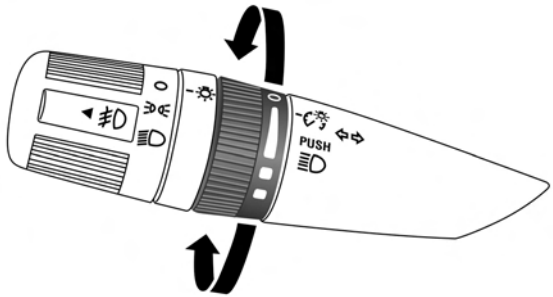

0310103558NA

Dimmer Control

Map/Reading Lights

These lights are mounted between the sun visors above the rear view mirror. Each light is turned on by pushing the button. Push the button a second time to turn the light off. The lights also come on when a door is opened or the dimmer control is turned fully upward, past the second detent.

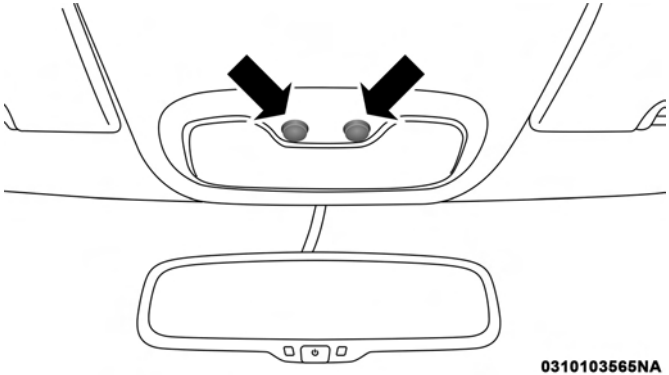

Map/Reading Lights

NOTE: The lights will remain on until the switch is pushed a second time, so be sure they have been turned off before leaving the vehicle. They will not turn off automatically.

WINDSHIELD WIPERS AND WASHERS

The windshield wiper/washer control lever is located on the right side of the steering column. The front wipers are operated by rotating a switch, located on the end of the lever. For information on the rear wiper/washer, refer to "Rear Window Wiper/Washer" in this section.

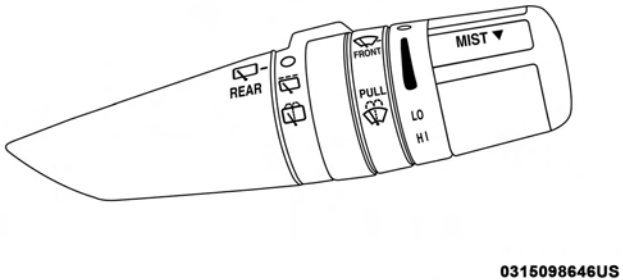

Wiper/Washer Control Lever

CAUTION!

- **Turn the windshield wipers off when driving through an automatic car wash. Damage to the windshield wipers may result if the wiper control is left in any position other than off.**
- **In cold weather, always turn off the wiper switch and allow the wipers to return to the park position before turning off the engine. If the wiper switch is left on and the wipers freeze to the windshield, damage to the wiper motor may occur when the vehicle is restarted.**
- **Always remove any buildup of snow that prevents the windshield wiper blades from returning to the off position. If the windshield wiper control is turned off and the blades cannot return to the off position, damage to the wiper motor may occur.**

Windshield Wiper Operation

Rotate the end of the lever upward to the second detent past the intermittent settings for low-speed wiper operation. Rotate the end of the lever upward to the third detent past the intermittent settings for high-speed wiper operation.

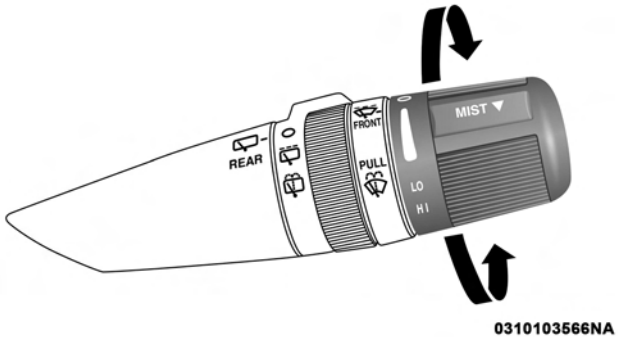

Windshield Wiper Operation

Intermittent Wiper System

Use the intermittent wiper when weather conditions make a single wiping cycle, with a variable pause between cycles, desirable. Select the delay interval by turning the end of the lever. Rotate the end of the lever upward (clockwise) to decrease the delay time and downward (counterclockwise) to increase the delay time. The delay can be regulated from a maximum of approximately 18 seconds between cycles, to a cycle every second.

NOTE: The wiper delay times depend on vehicle speed. If the vehicle is moving less than 10 mph (16 km/h), delay times will be doubled.

Windshield Washers

To use the washer, pull the control lever toward you and hold while spray is desired. If the lever is pulled while in the delay range, the wiper will operate in low-speed while the lever is pulled and for two wipe cycles after the lever is released, and then resume the intermittent interval previously selected.

If the lever is pulled while in the off position, the wipers will operate for two wipe cycles, then turn off.

WARNING!

Sudden loss of visibility through the windshield could lead to a collision. You might not see other vehicles or other obstacles. To avoid sudden icing of the windshield during freezing weather, warm the windshield with the defroster before and during windshield washer use.

Headlights On With Wipers (Available With Automatic Headlights Only)

When this feature is active, the headlights will turn on approximately 10 seconds after the wipers are turned on if the headlight switch is placed in the AUTO position. In addition, the headlights will turn off when the wipers are turned off if they were turned on by this feature.

NOTE: The Headlights On with Wipers feature can be turned on or off using the instrument cluster display. Refer to “Instrument Cluster Display” in “Getting To Know Your Instrument Panel” for further information.

Mist Feature

Push down on the control lever to activate a single wipe to clear the windshield of road mist or spray from a passing vehicle. As long as the lever is held down, the wipers will continue to operate.

NOTE: The mist feature does not activate the washer pump; therefore, no washer fluid will be sprayed on the windshield. The wash function must be used in order to spray the windshield with washer fluid.

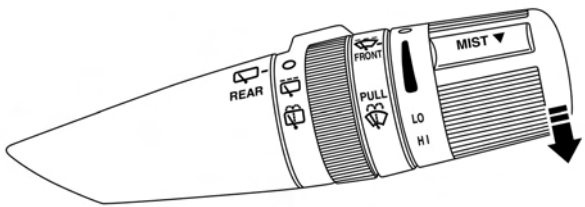

0310103567NA

Mist Operation

Rear Window Wiper/Washer

The rear wiper/washer is controlled by a rotary switch located on the center portion of the control lever. The control lever is located on the right side of the steering column.

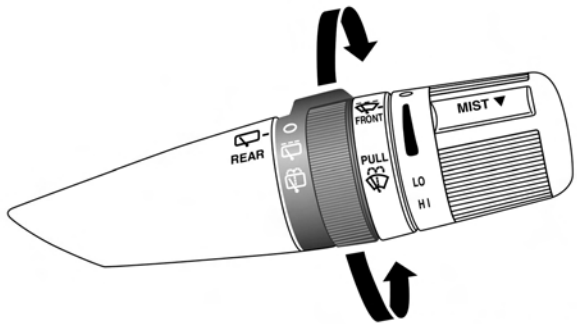

0310103568NA

Rear Wiper/Washer Control Lever

Rotate the center portion of the lever upward to the first detent position for rear wiper operation.

NOTE: The rear wiper operates in an intermittent mode only.

Rotate the center portion of the lever past the first detent to activate the rear washer. The washer pump and the wiper will continue to operate as long as the switch is held (for a maximum of 10 seconds). Upon release, the wiper will continue to cycle two times before returning to the set position.

If the rear wiper is operating when the ignition is turned OFF, the wiper will automatically return to the "park" position if power accessory delay is active. Power accessory delay can be cancelled by opening the door, if this happens the rear wiper will stop at its current position and will not go to "park".

CLIMATE CONTROLS

The Climate Control System allows you to regulate the temperature, airflow, and direction of air circulating throughout the vehicle. The controls are located on the instrument panel below the radio.

Manual Climate Controls

The controls for the manual heating and air conditioning system in this vehicle consist of a series of outer rotary dials and inner push knobs. These comfort controls can be set to obtain desired interior conditions.

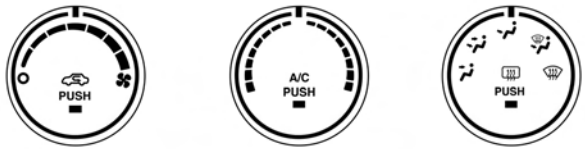

0313103262NA

Manual Climate Controls

Manual Climate Control Descriptions

Icon	Description
	Blower Control There are seven blower speeds. Use this control to regulate the amount of air forced through the system in any mode you select. The blower speed increases as you move the control clockwise from the off position. **NOTE:** Depending on the configuration, your vehicle may be equipped with four blower speeds.
A/C	**A/C Button** Press and release to change the current setting, the indicator illuminates when A/C is on. Performing this function again will cause the A/C operation to switch into manual mode and the A/C indicator will turn off.
	Temperature Control Use this control to regulate the temperature of the air inside the passenger compartment. Rotating the knob counterclockwise, from top center into the blue area of the scale, indicates cooler temperatures. Rotating the knob clockwise, into the red area, indicates warmer temperatures.
	Modes Control Turn the knob to adjust airflow distribution. The airflow distribution mode can be adjusted so air comes from the instrument panel outlets, floor outlets, defrost outlets and demist outlets.

Icon	Description
Panel Mode	**Panel Mode** Air comes from the outlets in the instrument panel. Each of these outlets can be individually adjusted to direct the flow of air. The air vanes of the center outlets and outboard outlets can be moved up and down or side to side to regulate airflow direction. There is a shut off wheel located below the air vanes to shut off or adjust the amount of airflow from these outlets.
Bi-Level Mode	**Bi-Level Mode** Air comes from the instrument panel outlets and floor outlets. A slight amount of air is directed through the defrost and side window demister outlets. **NOTE:** BI-LEVEL mode is designed under comfort conditions to provide cooler air out of the panel outlets and warmer air from the floor outlets.
Floor Mode	**Floor Mode** Air comes from the floor outlets. A slight amount of air is directed through the defrost and side window demister outlets.
Mix Mode	**Mix Mode** Air is directed through the floor, defrost, and side window demister outlets. This setting works best in cold or snowy conditions that require extra heat to the windshield. This setting is good for maintaining comfort while reducing moisture on the windshield.

Icon	Description
	Recirculation Button Push and release this button to change the system between recirculation mode and outside air mode. Recirculation can be used when outside conditions such as smoke, odors, dust, or high humidity are present. **NOTE:** • Continuous use of the Recirculation mode may make the inside air stuffy and window fogging may occur. Extended use of this mode is not recommended. • The use of the Recirculation mode in cold or damp weather could cause windows to fog on the inside, because of moisture buildup inside the vehicle. Select the outside air position for maximum defogging. • Recirculation can be used in all modes except for Defrost. • The A/C can be deselected manually without disturbing the mode control selection.
FRONT	**Front Defrost Mode** Turn the knob to the Front Defrost position. Air comes from the windshield and side window demist outlets. When the defrost button is selected, the blower level will increase. Use Defrost mode with maximum temperature settings for best windshield and side window defrosting and defogging.
REAR	**Rear Defrost Button** Push and release the Rear Defrost Control button to turn on the rear window defroster and the heated outside mirrors (if equipped). An indicator will illuminate when the rear window defroster is on. The rear window defroster automatically turns off after 10 minutes.

CAUTION!

Failure to follow these cautions can cause damage to the heating elements:

- **Use care when washing the inside of the rear window. Do not use abrasive window cleaners on the interior surface of the window. Use a soft cloth and a mild washing solution, wiping parallel to the heating elements. Labels can be peeled off after soaking with warm water.**
- **Do not use scrapers, sharp instruments, or abrasive window cleaners on the interior surface of the window.**
- **Keep all objects a safe distance from the window.**

Automatic Climate Controls

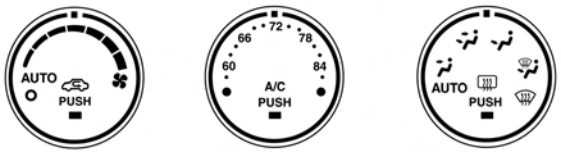

0313103263NA

Automatic Temperature Controls

Automatic Climate Control Descriptions

Icon	Description
	Blower Control There are seven blower speeds. Use this control to regulate the amount of air forced through the system in any mode you select. The blower speed increases as you move the control clockwise from the OFF position. **NOTE:** Depending on the configuration, your vehicle may be equipped with four blower speeds.

Icon	Description
AUTO	**AUTO Setting** Automatically controls the interior cabin temperature by adjusting airflow distribution and amount. Performing this function will cause the system to switch between manual mode and automatic modes. Refer to “Automatic Operation” for more information.
A/C	**A/C Button** Press and release to change the current setting, the indicator illuminates when A/C is on. Performing this function again will cause the A/C operation to switch into manual mode and the A/C indicator will turn off.
	Temperature Control Use this control to regulate the temperature of the air inside the passenger compartment. Rotating the knob counterclockwise, from top center into the lower numbers on the scale, indicates cooler temperatures. Rotating the knob clockwise, into the higher numbers on the scale, indicates warmer temperatures.
	Modes Control Turn the knob to adjust airflow distribution. The airflow distribution mode can be adjusted so air comes from the instrument panel outlets, floor outlets, defrost outlets and demist outlets.
Panel Mode	**Panel Mode** Air comes from the outlets in the instrument panel. Each of these outlets can be individually adjusted to direct the flow of air. The air vanes of the center outlets and outboard outlets can be moved up and down or side to side to regulate airflow direction. There is a shut off wheel located below the air vanes to shut off or adjust the amount of airflow from these outlets.

Icon	Description
Bi-Level Mode	**Bi-Level Mode** Air comes from the instrument panel outlets and floor outlets. A slight amount of air is directed through the defrost and side window demister outlets. **NOTE:** BI-LEVEL mode is designed under comfort conditions to provide cooler air out of the panel outlets and warmer air from the floor outlets.
Floor Mode	**Floor Mode** Air comes from the floor outlets. A slight amount of air is directed through the defrost and side window demister outlets.
Mix Mode	**Mix Mode** Air is directed through the floor, defrost, and side window demister outlets. This setting works best in cold or snowy conditions that require extra heat to the windshield. This setting is good for maintaining comfort while reducing moisture on the windshield.

Icon	Description
	Recirculation Button Push and release this button to change the system between recirculation mode and outside air mode. Recirculation can be used when outside conditions such as smoke, odors, dust, or high humidity are present. **NOTE:** • Continuous use of the Recirculation mode may make the inside air stuffy and window fogging may occur. Extended use of this mode is not recommended. • The use of the Recirculation mode in cold or damp weather could cause windows to fog on the inside, because of moisture buildup inside the vehicle. Select the outside air position for maximum defogging. • Recirculation can be used in all modes except for Defrost. • The A/C can be deselected manually without disturbing the mode control selection.
FRONT	**Front Defrost Mode** Turn the knob to the Front Defrost position. Air comes from the windshield and side window demist outlets. When the defrost button is selected, the blower level will increase. Use Defrost mode with maximum temperature settings for best windshield and side window defrosting and defogging.
REAR	**Rear Defrost Button** Push and release the Rear Defrost Control button to turn on the rear window defroster and the heated outside mirrors (if equipped). An indicator will illuminate when the rear window defroster is on. The rear window defroster automatically turns off after 10 minutes.

CAUTION!

Failure to follow these cautions can cause damage to the heating elements:

- **Use care when washing the inside of the rear window. Do not use abrasive window cleaners on the interior surface of the window. Use a soft cloth and a mild washing solution, wiping parallel to the heating elements. Labels can be peeled off after soaking with warm water.**
- **Do not use scrapers, sharp instruments, or abrasive window cleaners on the interior surface of the window.**
- **Keep all objects a safe distance from the window.**

Climate Control Functions

A/C (Air Conditioning)

The Air Conditioning (A/C) button allows the operator to manually activate or deactivate the air conditioning system. When the air conditioning system is turned on, cool dehumidified air will flow through the outlets into the cabin. For improved fuel economy, press the A/C button to turn off the air conditioning and manually adjust the blower and airflow mode settings. Also, make sure to select only Panel, Bi-Level or Floor modes.

NOTE:

- If fog or mist appears on the windshield or side glass, select Defrost mode and increase blower speed if needed.
- If your air conditioning performance seems lower than expected, check the front of the A/C condenser (located in front of the radiator), for an accumulation of dirt or insects. Clean with a gentle water spray from the front of the radiator and through the condenser.

Recirculation

When outside air contains smoke, odors, or high humidity, or if rapid cooling is desired, you may wish to recirculate interior air by pressing the Recirculation control button. The recirculation indicator will illuminate when this button is selected. Press the button a second time to turn off the Recirculation mode and allow outside air into the vehicle.

NOTE: In cold weather, use of recirculation mode may lead to excessive window fogging. The recirculation feature may be unavailable (button on the touchscreen greyed out) if conditions exist that could create fogging on the inside of the windshield. On systems with Manual Climate Controls, the Recirculation mode is not allowed in Defrost mode to improve window clearing operation. Recirculation will be disabled automatically if this mode is selected. Attempting to use Recirculation while in this mode will cause the LED in the control button to blink and then turn off.

Automatic Temperature Control (ATC) — If Equipped

Automatic Operation

The Automatic Temperature Control system automatically maintains the climate in the cabin of the vehicle at the comfort levels desired by the driver and passenger.

Operation of the system is quite simple.

Turn the Mode Control knob (on the right) and the Blower Control knob (on the left) to AUTO.

NOTE: The AUTO position performs best for front seat occupants only.

Manual Operation

This system offers a full complement of manual override features, which consist of Blower Preferred Automatic, Mode Preferred Automatic, or Blower and Mode Preferred Automatic. This means the operator can override the blower, the mode, or both. There is a manual blower range for times when the AUTO setting is not desired. The blower can be set to any fixed blower speed by rotating the Blower Control knob (on the left).

NOTE: Please read the Automatic Temperature Control Operation Chart that follows for details.

Automatic Temperature Control Operation		The system will...				
Operation	How	Blower Control	Mode Control	Air Temperature Control	Air Temperature Control	A/C Operation
Full Automatic Operation	Set blower knob to Auto. Set mode knob to Auto. Set temperature knobs for comfort.	Automatic	Automatic	Automatic	Automatic but can be overridden at any time	Automatic
Blower Preferred Automatic	Set blower knob to any desired airflow level other than Auto. Set mode knob to Auto. Set temperature knobs for comfort.	User selectable to any speed.	Automatic	Automatic	Automatic but can be overridden at any time	Automatic
Mode Preferred Automatic	Set mode knob to any desired air delivery point other than Auto. Set blower knob to Auto. Set temperature knobs for comfort.	Automatic	User selectable to any air delivery point.	Automatic	User selectable outside or recirculated. Not allowed in Defrost Mode	User selectable A/C on or off.
Blower and Mode Preferred Automatic	Set blower knob to any desired airflow level other than Auto. Set mode knob to any desired air delivery point other than Auto. Set temperature knobs for comfort.	User selectable to any speed.	User selectable to any air delivery point.	Automatic	User selectable outside or recirculated. Not allowed in Defrost Mode	User selectable A/C on or off.

0456006222

The operator can override the AUTO mode setting to change airflow distribution by rotating the Mode Control knob (on the right).

Operating Tips

NOTE: Refer to the chart at the end of this section for suggested control settings for various weather conditions.

Summer Operation

The engine cooling system must be protected with a high-quality antifreeze coolant to provide proper corrosion protection and to protect against engine overheating. OAT coolant (conforming to MS.90032) is recommended. Refer to “Dealer Service” in “Servicing And Maintenance” for proper coolant selection.

Winter Operation

To ensure the best possible heater and defroster performance, make sure the engine cooling system is functioning properly and the proper amount, type, and concentration of coolant is used. Refer to "Dealer Service" in "Servicing And Maintenance" for proper coolant selection. Use of the Air Recirculation mode during Winter months is not recommended because it may cause window fogging.

Vacation/Storage

Any time you store your vehicle or keep it out of service (i.e., vacation) for two weeks or more, run the air conditioning system at idle for about five minutes in fresh air with the blower setting on high. This will ensure adequate system lubrication to minimize the possibility of compressor damage when the system is started again.

Window Fogging

Vehicle windows tend to fog on the inside of the glass in mild, rainy and/or humid weather. Windows may frost on the inside of the glass in very cold weather. To clear the windows, select Defrost or Mix mode and increase the front blower speed. Do not use the Recirculation mode without A/C for long periods, as fogging may occur.

NOTE: Automatic Temperature Controls (ATC) will automatically adjust the climate control settings to reduce or eliminate window fogging on the front windshield. When this occurs, recirculation will be unavailable.

Outside Air Intake

Make sure the air intake, located directly in front of the windshield, is free of obstructions such as leaves. Leaves collected in the air intake may reduce airflow, can cause odor, and if they enter the plenum they could plug the water drains. In Winter months make sure the air intake is clear of ice, slush and snow.

A/C Air Filter

The climate control system filters outside air containing dust, pollen and some odors. Strong odors cannot be totally filtered out. Refer to "Dealer Service" in "Servicing And Maintenance" for filter replacement instructions.

Control Setting Suggestions For Various Weather Conditions

WEATHER	CONTROL SETTINGS
Hot weather and vehicle interior is very hot	Set the mode control to , A/C on, and blower on high. Roll down the windows for a minute to flush out the hot air. Once comfort is achieved adjust controls for comfort.
Warm Weather	Turn A/C on and set the mode control to the position.
Cool Sunny	Operate in position.
Cool & Humid conditions	Set the mode control to and turn on A/C to keep windows clear.
Cold Weather	Set the mode control to the position. If windshield fogging starts to occur, move the control towards the position.

0456052237

Control Settings Suggestions For Various Weather Conditions Chart

POWER WINDOWS — IF EQUIPPED

Power Window Switches

The window controls on the driver's door trim panel control all the door windows. There are single window controls on each passenger door trim panel, which operate the passenger door windows. The window controls will operate when the ignition placed in the ON/RUN or ACC position.

NOTE:

- For vehicles not equipped with the instrument cluster display, the power window switches will remain active for 45 seconds after the ignition is placed in the LOCK position. Opening either front door will cancel this feature.
- For vehicles equipped with the instrument cluster display, the power window switches will remain active for up to 10 minutes after the ignition is placed in the LOCK position. Opening either front door will cancel this feature. The time for this feature is programmable. Refer to "Instrument Cluster Display/Personal Settings (Customer-Programmable Features)" in "Getting To Know Your Instrument Panel" for further information.

WARNING!

Never leave children unattended in a vehicle, and do not let children play with power windows. Do not leave the key fob in or near the vehicle, or in a location accessible to children. Occupants, particularly unattended children, can become entrapped by the windows while operating the power window switches. Such entrapment may result in serious injury or death.

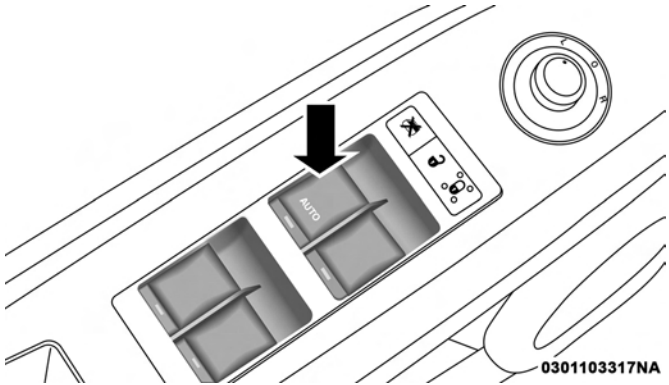

Power Window Switch Location

Auto-Down

The driver's door window switch has an Auto-Down feature. Push the window switch past the first detent, release, and the window will go down automatically. To cancel the Auto-Down movement, operate the switch in either the up or down direction and release the switch.

Window Lockout Switch

The window lockout switch on the driver's door allows you to disable the window controls on the rear passenger doors. To disable the window controls on the rear passenger doors, push the window lockout switch. To enable the rear window controls, push the window lockout switch a second time.

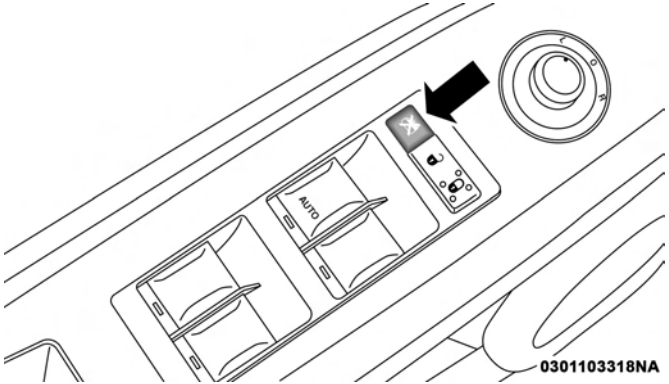

Window Lockout Switch

POWER SUNROOF — IF EQUIPPED

The power sunroof switch is located on the overhead console.

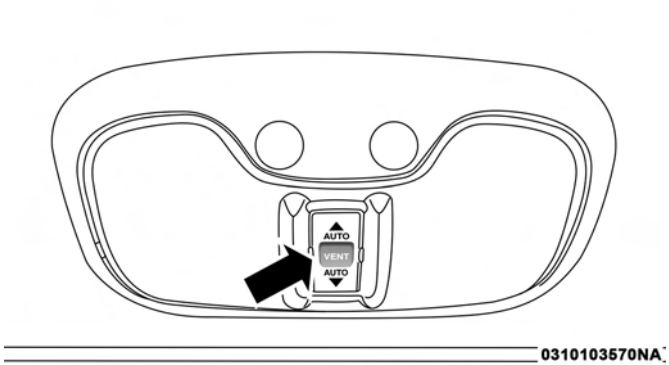

Power Sunroof Switch

WARNING!

- **Never leave children alone in a vehicle, or with access to an unlocked vehicle. Never leave the key fob in or near the vehicle, or in a location accessible**

(Continued)

WARNING! ***(Continued)***

to children. Occupants, particularly unattended children, can become entrapped by the power sunroof while operating the power sunroof switch. Such entrapment may result in serious injury or death.

- **In a collision, there is a greater risk of being thrown from a vehicle with an open sunroof. You could also be seriously injured or killed. Always fasten your seat belt properly and make sure all passengers are properly secured.**
- **Do not allow small children to operate the sunroof. Never allow your fingers, other body parts, or any object to project through the sunroof opening. Injury may result.**

Opening

Opening Sunroof — Express

Push the switch rearward and release it within one-half second. The sunroof and sunshade will open automatically and stop when the full open position is reached. This is called "Express Open." During Express Open operation, any other actuation of the sunroof switch will stop the sunroof.

Opening Sunroof — Manual Mode

To open the sunroof, push and hold the switch rearward. The sunroof will move rearward and automatically stop at full open position. Any release of the switch will stop the movement. The sunroof and sunshade will remain in a partially opened condition until the sunroof switch is pushed again.

Venting Sunroof — Express

Push and release the Vent button within one half second and the sunroof will open to the vent position. This is called "Express Vent", and it will occur regardless of sunroof position. During Express Vent operation, any other actuation of the switch will stop the sunroof.

Closing

Closing Sunroof — Express

Push the switch forward and release it within one-half second and the sunroof will close automatically from any position. The sunroof will close fully and stop automatically. This is called "Express Close." During Express Close operation, any other actuation of the switch will stop the sunroof.

Closing Sunroof — Manual Mode

To close the sunroof, push and hold the switch forward. The sunroof will move forward and automatically stop at full closed position. Any release of the switch will stop the movement and the sunroof will remain in a partially closed condition until the sunroof switch is pushed again.

Wind Buffeting

Wind buffeting can be described as the perception of pressure on the ears or a helicopter-type sound in the ears. Your vehicle may exhibit wind buffeting with the windows down, or the sunroof (if equipped) in certain open or partially open positions. This is a normal occurrence and can be minimized. If the buffeting occurs with the rear windows open, open the front and rear windows together to minimize the buffeting. If the buffeting occurs with the sunroof open, adjust the sunroof opening to minimize the buffeting or open any window.

Sunshade Operation

The sunshade can be opened manually. However, the sunshade will open automatically as the sunroof opens.

NOTE: The sunshade cannot be closed if the sunroof is open.

Pinch Protect Feature

This feature will detect an obstruction in the opening of the sunroof during Express Close operation. If an obstruction in the path of the sunroof is detected, the sunroof will automatically retract. Remove the obstruction if this occurs. Next, push the switch forward and release to Express Close.

Sunroof Maintenance

Use only a non-abrasive cleaner and a soft cloth to clean the glass panel.

Ignition Off Operation

For Vehicles Not Equipped With The Instrument Cluster Display

The power sunroof switch will remain active for 45 seconds after the ignition switch is turned to the LOCK position. Opening either front door will cancel this feature.

For Vehicles Equipped With The Instrument Cluster Display

The power sunroof switch will remain active for up to approximately ten minutes after the ignition switch is turned to the LOCK position. Opening either front door will cancel this feature.

TO OPEN AND CLOSE THE HOOD

To open the hood, two latches must be released.

1. Pull the hood release lever located on the left kick panel.

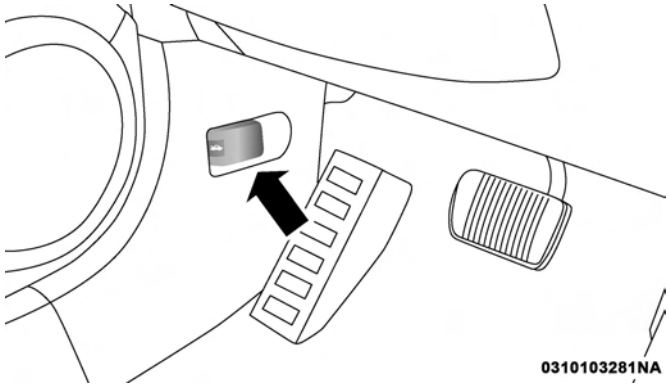

Hood Release Lever

2. Move the safety latch, located outside the vehicle under the front edge of the hood, toward the center and raise the hood.

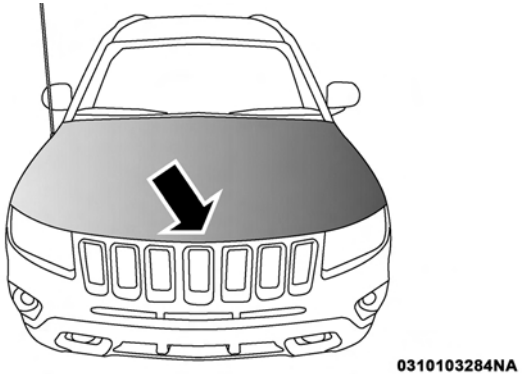

Hood Safety Latch Location

Lift the hood prop rod, clipped to the right side (left side facing hood) of the engine compartment to secure the hood in the open position. Place the hood prop at the location stamped into the inner hood surface.

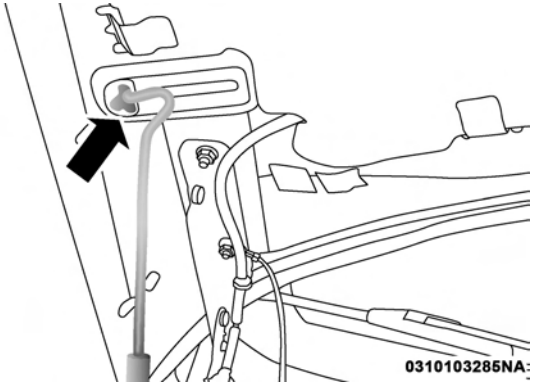

Prop Rod Location

WARNING!

Be sure the hood is fully latched before driving your vehicle. If the hood is not fully latched, it could open when the vehicle is in motion and block your vision. Failure to follow this warning could result in serious injury or death.

CAUTION!

To prevent possible damage:

- **Before closing hood, make sure the hood prop rod is fully seated into its storage retaining clips.**
- **Do not slam the hood to close it. Use a firm downward push at the center front edge of the hood to ensure that both latches engage. Never drive your vehicle unless the hood is fully closed, with both latches engaged.**

LIFTGATE

NOTE: The key that is used to start the vehicle is also used to lock or unlock the doors and open the liftgate.

To unlock the liftgate, insert the key into the lock and turn it to the right (manual lock models only). The liftgate can also be unlocked using the key fob or by activating the power door lock switches located on the front doors. The central locking/unlocking feature (if equipped) can also be activated from the liftgate key cylinder.

Once unlocked, the liftgate can be opened or closed without using the key fob. To open the liftgate, squeeze the liftgate release and pull the liftgate open with one fluid motion.

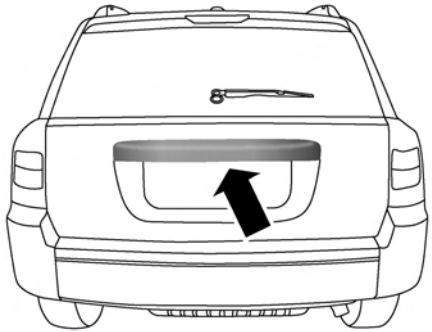

Liftgate Handle Location

NOTE:

- In the event of a power malfunction, or the key fob is inoperative, insert the key fob into the liftgate lock cylinder and turn to the right (manual lock models only). Using the liftgate handle, pull the liftgate open with one fluid motion.
- Although the liftgate has no inside release mechanism, the liftgate trim panel includes an opening with a snap-in cap that provides access to release the latch in the event of an electrical system malfunction.

WARNING!

- **Driving with the liftgate open can allow poisonous exhaust gases into your vehicle. You and your passengers could be injured by these fumes. Keep the liftgate closed when you are operating the vehicle.**
- **If you are required to drive with the liftgate open, make sure that all windows are closed, and the climate control blower switch is set at high speed. Do not use the recirculation mode.**

Gas props support the liftgate in the open position. However, because the gas pressure drops with temperature, it may be necessary to assist the props when opening the liftgate in cold weather.

Cargo Area Features

Cargo Light

The light is mounted in the headliner above the cargo area to illuminate the cargo area.

Cargo Cover

The cargo area trim panels include two notches for mounting the available tonneau cover that accommodates the reclining rear seat.

To install the Cargo Cover, insert either end of the cover into one of the two notches located in the rear trim panels. With one of the cover ends installed, push inward on the opposite end and install it into the same notch location of the rear trim panel.

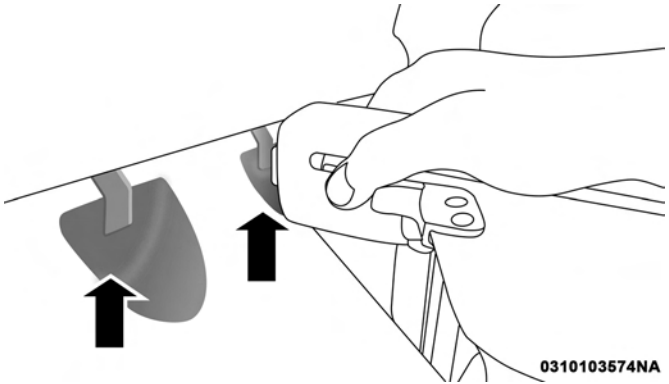

Rear Trim Notches

Using the handle, pull the cover toward you and guide the rear cover posts into the guides located on both sides of the rear trim panel.

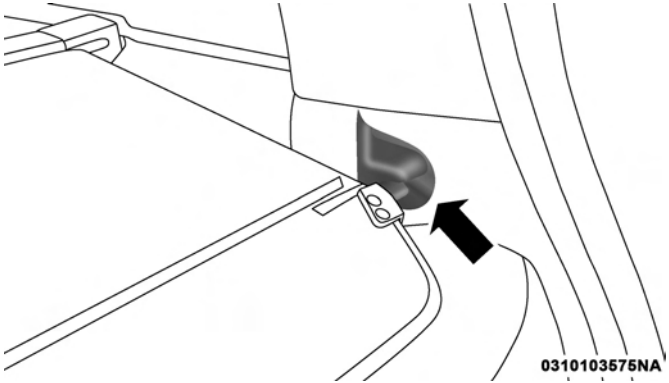

Cargo Cover Guides

WARNING!

In a collision, a cargo cover loose in the vehicle could cause injury. It could fly around in a sudden stop and strike someone in the vehicle. Do not store the cargo cover on the cargo floor or in the passenger compartment. Remove the cover from the vehicle when taken from its mounting. Do not store in the vehicle.

Removable Load Floor

The cargo area load floor is removable and can be washed with mild soap and water.

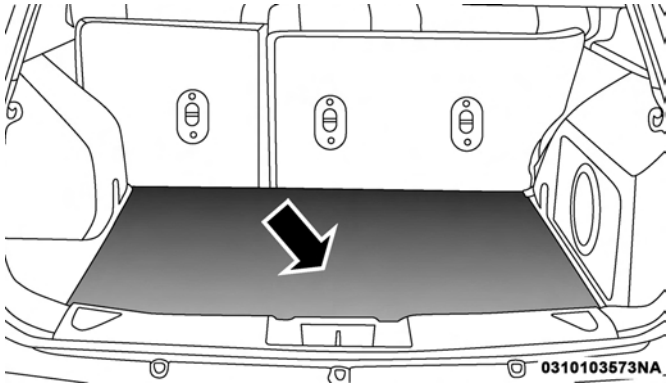

Removable Load Floor

Cargo Tie-Down Loops

There are four tie-downs (D-rings) installed in the cargo area for securing cargo.

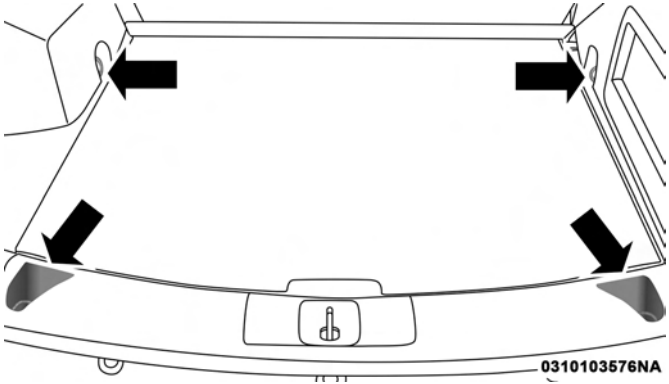

Cargo Area Tie-Downs

WARNING!

- **Cargo tie-down loops are not safe anchors for a child seat tether strap. In a sudden stop or collision a loop could pull loose and allow the child seat to come loose. A child could be badly injured. Use only the anchors provided for child seat tethers.**
- **The weight and position of cargo and passengers can change the vehicle center of gravity and vehicle**

(Continued)

WARNING! ***(Continued)***

handling. To avoid loss of control resulting in personal injury, follow these guidelines for loading your vehicle:

- **Always place cargo evenly on the cargo floor. Put heavier objects as low and as far forward as possible.**
- **Place as much cargo as possible in front of the rear axle. Too much weight or improperly placed weight over or behind the rear axle can cause the rear of the vehicle to sway.**
- **Do not pile luggage or cargo higher than the top of the seatback. This could impair visibility or become a dangerous projectile in a sudden stop or collision.**
- **To help protect against personal injury, passengers should not be seated in the rear cargo area. The rear cargo space is intended for load carrying purposes only, not for passengers, who should sit in seats and use seat belts.**

Fold Down Speakers — If Equipped

When the liftgate is open, the speakers can swing down off the trim panel to face rearward, for tailgating and other activities.

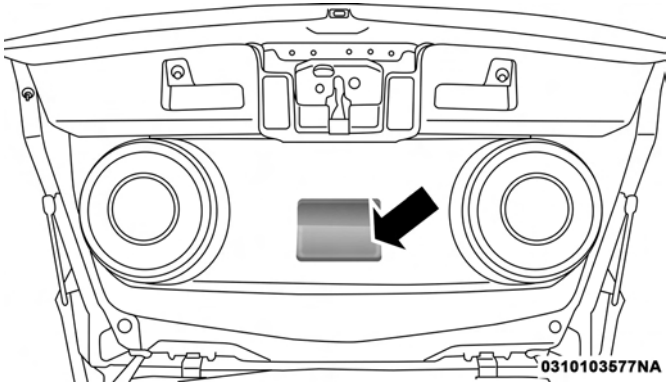

Fold Down Speakers

GARAGE DOOR OPENER — IF EQUIPPED

HomeLink replaces up to three hand-held transmitters that operate devices such as garage door openers, motorized gates, lighting or home security systems. The HomeLink unit is powered by your vehicles 12 Volt battery.

The HomeLink buttons, located on either the overhead console, headliner or sunvisor, designate the three different HomeLink channels. The HomeLink indicator is located above the center button.

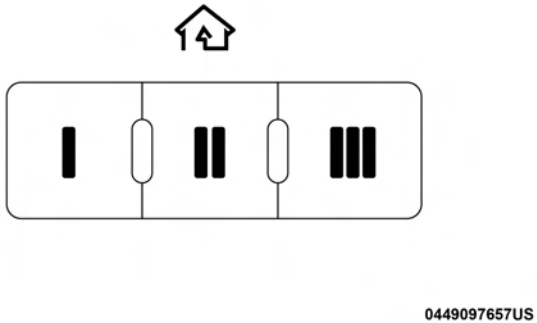

HomeLink Buttons/Overhead Consoles

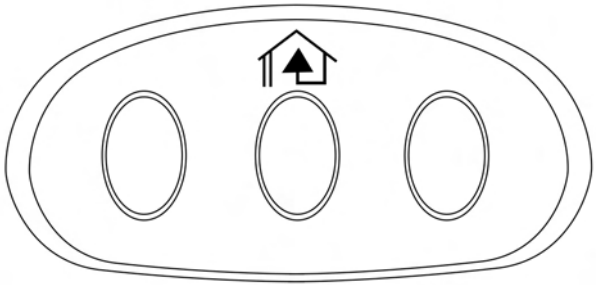

0322103261NA

HomeLink Buttons/Sunvisor/Headliner

NOTE: HomeLink is disabled when the Vehicle Security Alarm is active.

Before You Begin Programming HomeLink

Be sure that your vehicle is parked outside of the garage before you begin programming.

For more efficient programming and accurate transmission of the radio-frequency signal, it is recommended that a new battery be placed in the hand-held transmitter of the device that is being programmed to the HomeLink system.

To erase the channels, place the ignition in the ON/RUN position and push and hold the two outside HomeLink buttons (I and III) for up 20 seconds or until the red indicator flashes.

NOTE:

- Erasing all channels should only be performed when programming HomeLink for the first time. Do not erase channels when programming additional buttons.
- If you have any problems, or require assistance, please call toll-free 1-800-355-3515 or, on the Internet at HomeLink.com for information or assistance.

Programming A Rolling Code

For programming garage door openers that were manufactured after 1995:

These garage door openers can be identified by the “LEARN” or “TRAIN” button located where the hanging antenna is attached to the garage door opener. It is NOT the button that is normally used to open and close the door. The name and color of the button may vary by manufacturer.

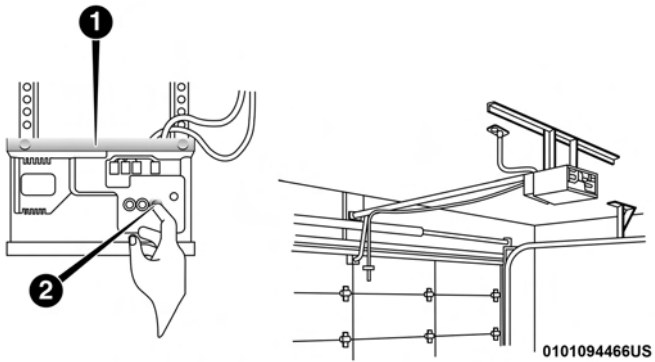

Training The Garage Door Opener

1 — Door Opener
2 — Training Button

1. Place the ignition in the ON/RUN position.
2. Place the hand-held transmitter 1 to 3 inches (3 to 8 cm) away from the HomeLink button you wish to program while keeping the HomeLink indicator light in view.
3. Push and hold the HomeLink button you want to program while you push and hold the hand-held transmitter button.
4. Continue to hold both buttons and observe the indicator light. The HomeLink indicator will flash slowly and then rapidly after HomeLink has received the frequency signal from the hand-held transmitter. Release both buttons after the indicator light changes from slow to rapid.
5. At the garage door opener motor (in the garage), locate the “LEARN” or “TRAINING” button. This can usually be found where the hanging antenna wire is attached to the garage door opener/device motor. Firmly push and release the “LEARN” or “TRAINING” button. On some garage door openers/devices there may be a light that blinks when the garage door opener/device is in the LEARN/TRAIN mode.

NOTE: You have 30 seconds in which to initiate the next step after the LEARN button has been pushed.

6. Return to the vehicle and push the programmed HomeLink button twice (holding the button for two seconds each time). If the garage door opener/device activates, programming is complete.

NOTE: If the garage door opener/device does not activate, push the button a third time (for two seconds) to complete the training.

To program the remaining two HomeLink buttons, repeat each step for each remaining button. DO NOT erase the channels.

Programming A Non-Rolling Code

For programming Garage Door Openers manufactured before 1995:

1. Place the ignition in the ON/RUN position.

NOTE: For vehicles equipped with Keyless Enter-N-Go, place the ignition in the RUN position with the engine ON. Make sure while programming HomeLink with the engine ON that your vehicle is outside of your garage, or that the garage door remains open at all times.

2. Place the hand-held transmitter 1 to 3 inches (3 to 8 cm) away from the HomeLink button you wish to program while keeping the HomeLink indicator light in view.
3. Push and hold the Homelink button you want to program while you push and hold the hand-held transmitter button.
4. Continue to hold both buttons and observe the indicator light. The Homelink indicator will flash slowly and then rapidly after HomeLink has received the frequency signal from the hand-held transmitter. Release both buttons after the indicator light changes from slow to rapid.
5. Push and hold the programmed HomeLink button and observe the indicator light.
   - If the indicator light stays on constantly, programming is complete and the garage door/device should activate when the HomeLink button is pushed.
   - To program the two remaining HomeLink buttons, repeat each step for each remaining button. DO NOT erase the channels.

Reprogramming A Single HomeLink Button (Non-Rolling Code)

To reprogram a channel that has been previously trained, follow these steps:

1. Cycle the ignition to the ON/RUN position.

NOTE: For vehicles equipped with Keyless Enter-N-Go, place the ignition in the RUN position with the engine ON. Make sure while programming HomeLink with the engine ON that your vehicle is outside of your garage, or that the garage door remains open at all times.

2. Push and hold the desired HomeLink button until the indicator light begins to flash after 20 seconds. **Do not release the button.**

3. **Without releasing the button**, proceed with "Programming A Non-Rolling Code" step two and follow all remaining steps.

Canadian/Gate Operator Programming

For programming transmitters in Canada/United States that require the transmitter signals to "time-out" after several seconds of transmission:

Canadian radio frequency laws require transmitter signals to time-out (or quit) after several seconds of transmission, which may not be long enough for HomeLink to pick up the signal during programming. Similar to this Canadian law, some U.S. gate operators are designed to time-out in the same manner.

It may be helpful to unplug the device during the cycling process to prevent possible overheating of the garage door or gate motor.

1. Cycle the ignition to the ON/RUN position.

NOTE: For vehicles equipped with Keyless Enter-N-Go, place the ignition in the RUN position with the engine ON. Make sure while programming HomeLink with the engine ON that your vehicle is outside of your garage, or that the garage door remains open at all times.

2. Place the hand-held transmitter 1 to 3 inches (3 to 8 cm) away from the HomeLink button you wish to program while keeping the HomeLink indicator light in view.

3. Continue to push and hold the HomeLink button while you push and release ("cycle") your hand-held transmitter every two seconds until HomeLink has successfully accepted the frequency signal. The indicator light will flash slowly and then rapidly when fully trained.

4. Watch for the HomeLink indicator to change flash rates. When it changes, it is programmed. It may take up to 30 seconds or longer in rare cases. The garage door may open and close while you are programming.

5. Push and hold the programmed HomeLink button and observe the indicator light.

NOTE:

- If the indicator light stays on constantly, programming is complete and the garage door/device should activate when the HomeLink button is pushed.
- To program the two remaining HomeLink buttons, repeat each step for each remaining button. DO NOT erase the channels.

If you unplugged the garage door opener/device for programming, plug it back in at this time.

Reprogramming A Single HomeLink Button (Canadian/Gate Operator)

To reprogram a channel that has been previously trained, follow these steps:

1. Cycle the ignition to the ON/RUN position.

NOTE: For vehicles equipped with Keyless Enter-N-Go, place the ignition in the RUN position with the engine ON. Make sure while programming HomeLink with the engine ON that your vehicle is outside of your garage, or that the garage door remains open at all times.

2. Push and hold the desired HomeLink button until the indicator light begins to flash after 20 seconds. **Do not release the button.**
3. **Without releasing the button**, proceed with "Canadian/Gate Operator Programming" step 2 and follow all remaining steps.

Using HomeLink

To operate, push and release the programmed HomeLink button. Activation will now occur for the programmed device (i.e. garage door opener, gate operator, security system, entry door lock, home/office lighting, etc.) The hand-held transmitter of the device may also be used at any time.

Security

It is advised to erase all channels before you sell or turn in your vehicle.

To do this, push and hold the two outside buttons for 20 seconds until the red indicator flashes.

NOTE: All channels will be erased. Individual channels cannot be erased.

The HomeLink Universal Transceiver is disabled when the Vehicle Security Alarm is active.

Troubleshooting Tips

If you are having trouble programming HomeLink, here are some of the most common solutions:

- Replace the battery in the Garage Door Opener hand-held transmitter.
- Push the LEARN button on the Garage Door Opener to complete the training for a Rolling Code.
- Did you unplug the device for programming and remember to plug it back in?

If you have any problems, or require assistance, please call toll-free 1-800-355-3515 or, on the Internet at HomeLink.com for information or assistance.

WARNING!

- **Vehicle exhaust contains carbon monoxide, a dangerous gas. Do not run your vehicle in the garage while programming the transceiver. Exhaust gas can cause serious injury or death.**
- **Your motorized door or gate will open and close while you are programming the universal transceiver. Do not program the transceiver if people, pets**

(Continued)

WARNING! ***(Continued)***

or other objects are in the path of the door or gate. Only use this transceiver with a garage door opener that has a "stop and reverse" feature as required by Federal safety standards. This includes most garage door opener models manufactured after 1982. Do not use a garage door opener without these safety features. Call toll-free 1-800-355-3515 or, on the Internet at HomeLink.com for safety information or assistance.

General Information

This device complies with FCC rules Part 15 and Industry Canada RSS-210. Operation is subject to the following two conditions:

1. This device may not cause harmful interference, and
2. This device must accept any interference received, including interference that may cause undesired operation.

NOTE:

- The transmitter has been tested and it complies with FCC and IC rules. Changes or modifications not expressly approved by the party responsible for compliance could void the user's authority to operate the device.
- The term IC before the certification/registration number only signifies that Industry Canada technical specifications were met.

CONSOLE FEATURES

The floor console contains both an upper and lower storage compartment.

To open the upper storage compartment, push inward on the upper handle to unlatch the upper lid and lift the lid open.

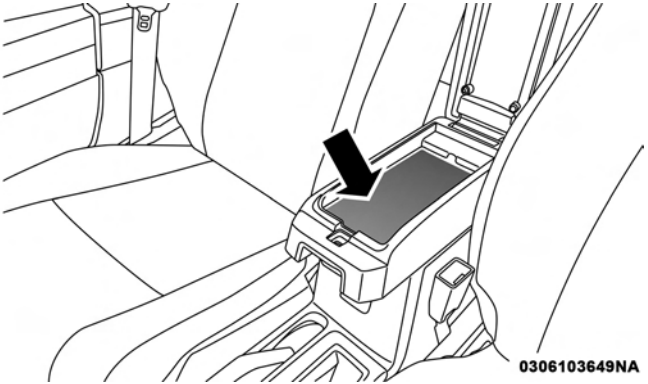

Upper Storage Compartment

To open the lower storage compartment, lift upward on the lower handle to unlatch the lower storage compartment and lift the lid open.

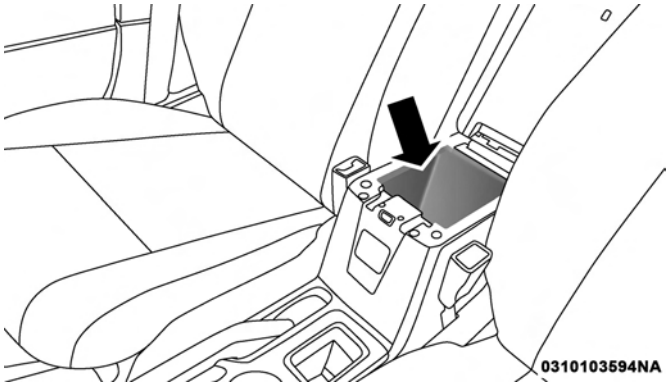

Lower Storage Compartment

WARNING!

Do not operate this vehicle with a console compartment lid in the open position. Driving with the console compartment lid open may result in injury in a collision.

INTERNAL EQUIPMENT

Glove Compartment And Storage Bin

Located on the passenger side of the instrument panel are an upper storage bin and a lower glove compartment.

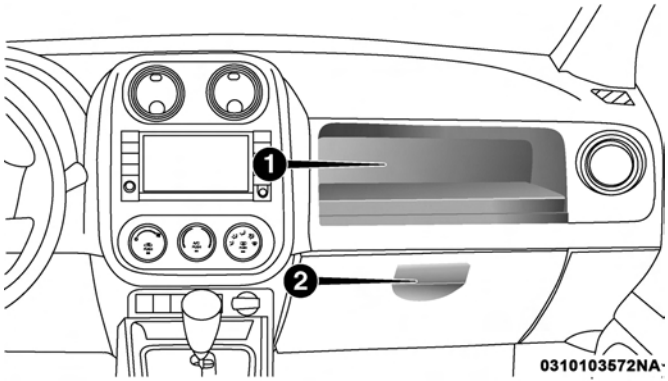

Storage Bins

1 — Upper Storage Bin
2 — Lower Glove Compartment

To open the lower glove compartment, pull outward on the release handle.

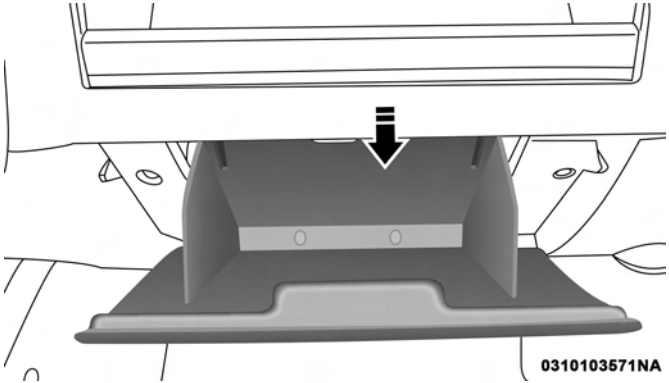

Glove Compartment

Door Storage

The interior door panels are equipped with lower storage areas.

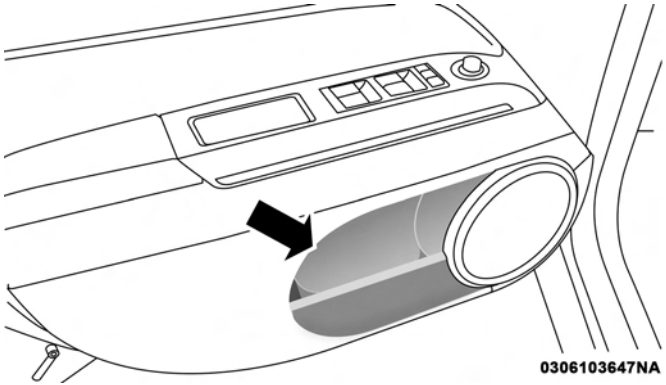

Front Door Storage

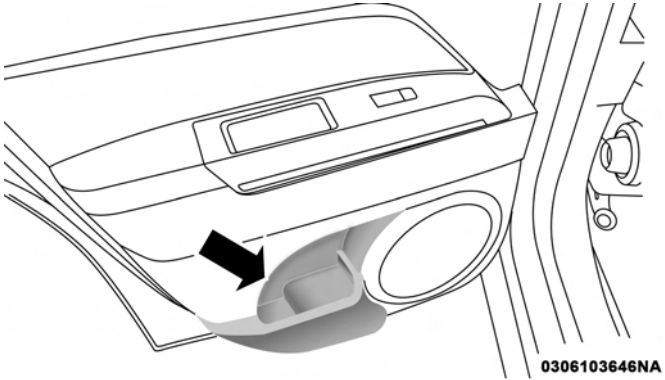

Rear Door Storage

Electrical Power Outlets

There is a standard 12 Volt (13 Amp) power outlet located in the Integrated Center Stack (ICS) for added convenience. This power outlet can power mobile phones, electronics and other low power devices.

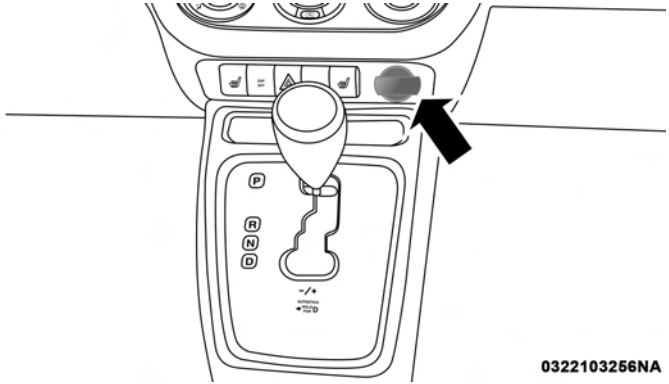

12 Volt Power Outlet

Power is available when the ignition switch is in the ON or ACC position. Insert the cigar lighter or accessory plug into the outlet for use. **To preserve the heating element, do not hold the lighter in the heating position.**

NOTE: To ensure proper operation a MOPAR knob and element must be used.

CAUTION!

- **Do not exceed the maximum power of 160 Watts (13 Amps) at 12 Volts. If the 160 Watt (13 Amp) power rating is exceeded the fuse protecting the system will need to be replaced.**
- **Power outlets are designed for accessory plugs only. Do not insert any other object in the power outlets as this will damage the outlet and blow the fuse. Improper use of the power outlet can cause damage not covered by your New Vehicle Limited Warranty.**

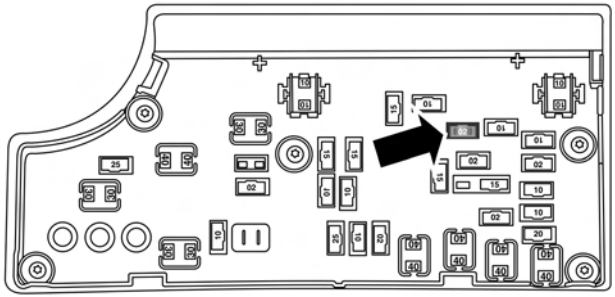

0322103258NA

Power Outlet Fuse Location

WARNING!

To avoid serious injury or death:

- **Only devices designed for use in this type of outlet should be inserted into any 12 Volt outlet.**
- **Do not touch with wet hands.**
- **Close the lid when not in use and while driving the vehicle.**
- **If this outlet is mishandled, it may cause an electric shock and failure.**

CAUTION!

- **Many accessories that can be plugged in draw power from the vehicle's battery, even when not in use (i.e., cellular phones, etc.). Eventually, if plugged in long enough, the vehicle's battery will discharge sufficiently to degrade battery life and/or prevent the engine from starting.**
- **Accessories that draw higher power (i.e., coolers, vacuum cleaners, lights, etc.) will degrade the battery even more quickly. Only use these intermittently and with great caution.**
- **After the use of high power draw accessories, or long periods of the vehicle not being started (with accessories still plugged in), the vehicle must be driven a sufficient length of time to allow the generator to recharge the vehicle's battery.**

Power Inverter — If Equipped

A 115 Volt (150 Watt) AC power inverter is located on the front of the center console for added convenience. This outlet can power mobile phones, electronics and other low power devices requiring power up to 150 Watts. Certain high-end video games consoles will exceed this power limit, as will most power tools.

The power inverter is designed with built-in overload protection. If the power rating of 150 Watts is exceeded, the power inverter will automatically shut down. Once the electrical device has been removed from the outlet the inverter should automatically reset. If the power rating exceeds approximately 170 Watts, the power inverter may have to be reset manually. To reset the inverter manually, unplug the device and plug it in again. To avoid overloading the circuit, check the power ratings on electrical devices prior to using the inverter.

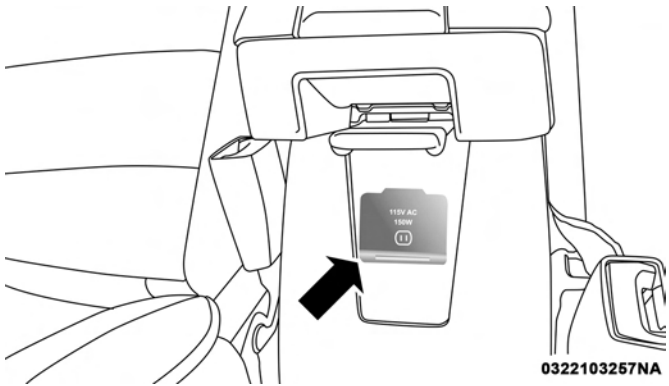

115 Volt Power Outlet

WARNING!

To avoid serious injury or death:
- **Do not use a three-prong adaptor.**
- **Do not insert any objects into the receptacles.**
- **Do not touch with wet hands.**
- **Close the lid when not in use.**
- **If this outlet is mishandled, it may cause an electric shock and failure.**

CAUTION!

- **Many accessories that can be plugged in draw power from the vehicle's battery, even when not in use (i.e., cellular phones, etc.). Eventually, if plugged in long enough, the vehicle's battery will discharge sufficiently to degrade battery life and/or prevent engine starting.**
- **Accessories that draw higher power (i.e., coolers, vacuum cleaners, lights, etc.) will degrade the battery even more quickly. Only use these intermittently and with great caution.**

(Continued)

CAUTION! ***(Continued)***

- **After the use of high power draw accessories, or long periods of the vehicle not being started (with accessories still plugged in), the vehicle must be driven a sufficient length of time to allow the generator to recharge the vehicle's battery.**

Cupholders

Your vehicle is equipped with four cupholders. There are two illuminated cupholders located in the front.

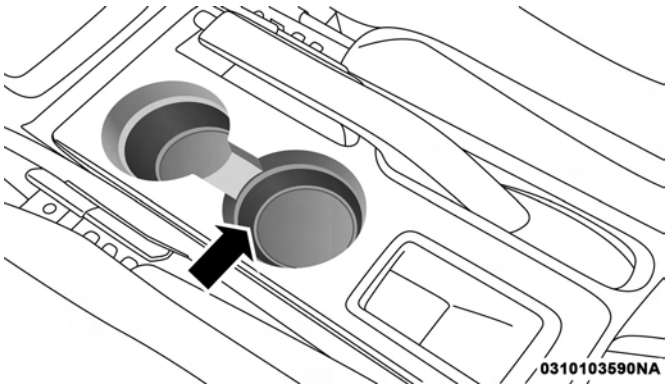

Front Cupholders

There are two cupholders located in the back for the rear passengers.

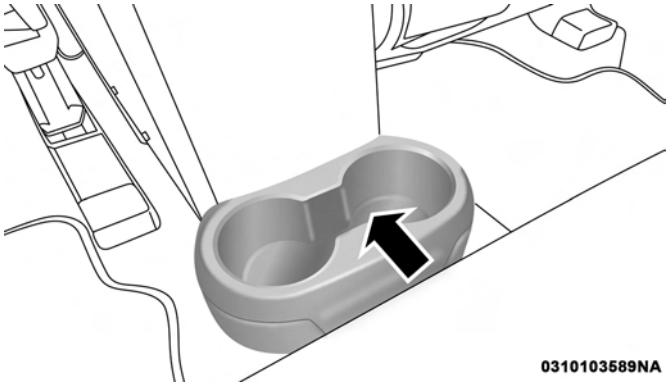

Rear Cupholders

ROOF LUGGAGE RACK — IF EQUIPPED

The crossbars and siderails are designed to carry the cargo on vehicles equipped with a luggage rack. The load must not exceed 150 lbs (68 kg), and should be uniformly distributed over the luggage rack crossbars.

NOTE: If not equipped with crossbars, your authorized dealer can order and install MOPAR crossbars built specifically for this roof rack system.

Distribute cargo weight evenly on the luggage rack crossbars. The luggage rack does not increase the total load carrying capacity of the vehicle. Be sure the total load of cargo inside the vehicle plus that on the external rack does not exceed the maximum vehicle load capacity.

The crossbars must also be secured in one of the seven detent positions marked with an arrow on the siderails to prevent movement. To move the crossbars, loosen the thumb screws located at the upper edge of each crossbar approximately eight turns, then move the crossbar to the desired position, keeping the crossbars perpendicular to the luggage rack side rails. Once the crossbar is in one of the seven detent positions, retighten the thumb screws to lock the crossbar into position.

NOTE:

- To help control wind noise when the crossbars are not in use, place the front crossbar in the first detent from the front of the vehicle and the rear crossbar in the second detent from the rear of the vehicle.
- If the rear crossbar (or any metallic object) is placed over the satellite radio antenna (if equipped), you may experience interruption of satellite radio reception. For improved satellite radio reception, place the rear crossbar in the second detent from the rear of the vehicle when not in use.

WARNING!

Cargo must be securely tied before driving your vehicle. Improperly secured loads can fly off the vehicle, particularly at high speeds, resulting in personal injury or property damage. Follow the roof rack cautions when carrying cargo on your roof rack.

CAUTION!

- **To prevent damage to the roof of your vehicle, DO NOT carry any loads on the luggage rack without crossbars installed. The load should be secured and placed on top of the crossbars, not directly on the roof. If it is necessary to place the load on the roof, place a blanket or some other protection between the load and the roof surface.**
- **To avoid damage to the luggage rack and vehicle, do not exceed the maximum luggage rack load capacity of 150 lb (68 kg). Always distribute heavy loads as evenly as possible and secure the load appropriately.**
- **Long loads which extend over the windshield, such as wood panels or surfboards, or loads with large frontal area should be secured to both the front and rear of the vehicle.**
- **Travel at reduced speeds and turn corners carefully when carrying large or heavy loads on the roof rack. Wind forces, due to natural causes or nearby truck traffic, can add sudden upward lift to a load. This is especially true on large flat loads and may result in damage to the cargo or your vehicle.**

GETTING TO KNOW YOUR INSTRUMENT PANEL

CONTENTS

■ INSTRUMENT CLUSTER 97

□ Instrument Cluster Descriptions 97

■ INSTRUMENT CLUSTER DISPLAY — IF EQUIPPED 100

□ Interactive Display And Controls 100

□ Oil Change Indicator System 103

□ Instrument Cluster Display Functions 103

□ Compass/Temperature/Audio 104

□ Average Fuel Economy 104

□ Distance To Empty (DTE) 104

□ Tire Pressure Monitor (TPM) 104

□ Elapsed Time 104

□ Display Units Of Measure In 105

□ Personal Settings (Customer-Programmable Features) 105

■ WARNING/INDICATOR LIGHTS AND MESSAGES 109

□ Red Telltale Lights 109

□ Yellow Telltale Lights 114

□ Green Telltale Lights 122

□ Blue Telltale Lights 123

□ White Telltale Lights 124

■ MINI-TRIP COMPUTER — IF EQUIPPED 124

□ Control Buttons 125

□ STEP Button 125

□ RESET Button 125

□ Trip Odometer (ODO) 125

■ ONBOARD DIAGNOSTIC SYSTEM — OBD II . . .125

□ Onboard Diagnostic System (OBD II) Cybersecurity 126

□ Loose Fuel Filler Cap Message 126

■ EMISSIONS INSPECTION AND MAINTENANCE PROGRAMS 127

INSTRUMENT CLUSTER

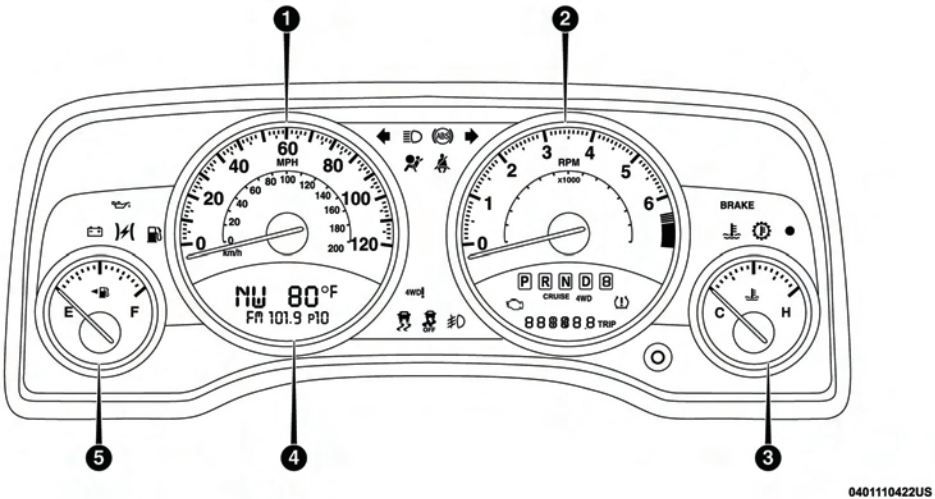

Instrument Cluster

Instrument Cluster Descriptions

1. Speedometer
   - The Speedometer shows the vehicle speed in miles per hour (MPH) and kilometers per hour (km/h).

Odometer Display / Trip Odometer Display

This display indicates the total distance the vehicle has been driven.

NOTE: U.S. Federal regulations require that upon transfer of vehicle ownership, the seller certify to the purchaser the correct mileage that the vehicle has been driven. If your odometer needs to be repaired or serviced, the repair technician should leave the odometer reading the same as it was before the repair or service. If s/he cannot do so, then the odometer must be set at zero, and a sticker must be placed in the door jamb stating what the mileage was before the repair or service. It is a good idea for you to make a record of the odometer reading before the repair/service, so that you can be sure that it is properly reset, or that the door jamb sticker is accurate if the odometer must be reset at zero.

2. Tachometer
   - This gauge measures engine revolutions per minute (RPM x 1000). Before the pointer reaches the red area, ease up on the accelerator to prevent engine damage.
3. Temperature Gauge
   - The temperature gauge shows engine coolant temperature. Any reading within the normal range indicates that the engine cooling system is operating satisfactorily.
   - The gauge pointer will likely indicate a higher temperature when driving in hot weather or up mountain grades. It should not be allowed to exceed the upper limits of the normal operating range.

WARNING!

A hot engine cooling system is dangerous. You or others could be badly burned by steam or boiling coolant. You may want to call an authorized dealer for service if your vehicle overheats. If you decide to look under the hood yourself, see "Maintaining Your Vehicle". Follow the warnings under the Cooling System Pressure Cap paragraph.

CAUTION!

Driving with a hot engine cooling system could damage your vehicle. If the temperature gauge reads "H" pull over and stop the vehicle. Idle the vehicle with the air conditioner turned off until the pointer drops back into the normal range. If the pointer remains on the "H", turn the engine off immediately and call an authorized dealer for service.

4. Instrument Cluster Display — If Equipped / Odometer Display / Trip Odometer Display

Instrument Cluster Display — If Equipped

The instrument cluster display features a driver-interactive display that is located in the instrument cluster. Refer to "Instrument Cluster Display" in this section for further information.

Message Display Area

When the appropriate conditions exist, the following odometer messages will display:

door . . . . . Door Open
gATE . . . . . Liftgate Open
LoW tirE . . . . . Low Tire Pressure
gASCAP . . . . . Fuel Cap Fault
noFUSE . . . . . Fuse Fault
CHAngE OIL . . . . . Oil Change Required
LoCOOL . . . . . Low Coolant

NOTE: Some of the above warnings will be displayed in the instrument cluster display area located in the instrument cluster.

Refer to "Instrument Cluster Display" in this section for further information.

LoW tirE

When the appropriate condition exists, the odometer display will toggle between "LoW" and "tirE" for three cycles.

gASCAP

If the vehicle diagnostic system determines that the fuel filler cap is loose, improperly installed, or damaged, a "gASCAP" message will display in the odometer display area. Tighten the fuel filler cap properly and push the STEP button on the steering wheel to turn off the message. If the problem continues, the message will appear the next time the vehicle is started.

noFUSE

If the vehicle diagnostic system determines that the Ignition Off Draw (IOD) fuse is improperly installed, or damaged, a "noFUSE" message will display in the odometer display area. Refer to "Fuses" in "In Case Of Emergency" for further information on fuses and fuse locations.

CHAngE OIL

Your vehicle is equipped with an engine oil change indicator system. The odometer display will toggle between "CHAngE" and "Oil" for approximately 12 seconds, after a single chime has sounded, to indicate the next scheduled oil change interval. The engine oil change indicator system is duty cycle-based, which means the engine oil change interval may fluctuate dependent upon your personal driving style.

5. Fuel Gauge
   - The pointer shows the level of fuel in the fuel tank when the ignition is in the ON/RUN position
   - The fuel pump symbol points to the side of the vehicle where the fuel door is located.

INSTRUMENT CLUSTER DISPLAY — IF EQUIPPED

Your vehicle may be equipped with an instrument cluster display, which offers useful information to the driver. With the ignition in the STOP/OFF mode, opening/closing of a door will activate the display for viewing, and display the total miles, or kilometers, in the odometer. Your instrument cluster display is designed to display important information about your vehicle's systems and features. Using a driver interactive display located on the instrument panel, your instrument cluster display can show you how systems are working and give you warnings when they aren't. The steering wheel mounted controls allow you to scroll through and enter the main menus and submenus. You can access the specific information you want and make selections and adjustments.

Interactive Display And Controls

The instrument cluster display features a driver-interactive display that is located in the instrument cluster.

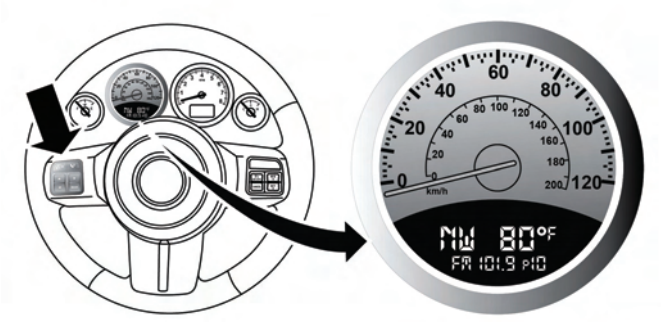

Instrument Cluster Display Menu Items

The menu items consists of the following:

- System Status
- Units
- Vehicle Information Warning Message Displays
- Personal Settings (Customer-Programmable Features)
- Compass Heading
- Outside Temperature Display
- Trip Computer Functions
- Uconnect Phone Displays (If Equipped)
- Audio Mode Display
- Tire Pressure Monitor (TPM)

The system allows the driver to select information by pushing the following buttons mounted on the steering wheel:

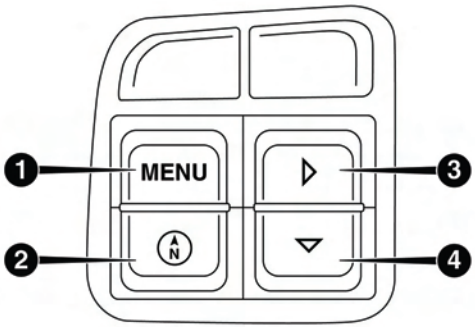

Steering Wheel Control Buttons

1 — MENU Button	3 — Right Arrow Button
2 — Compass Button	4 — Down Arrow Button

MENU Button

Push and release the **MENU** button to scroll through the main menus (Fuel Economy, Warnings, Timer, Units, System, Personal Settings) or to exit submenus.

Compass Button

Push and release the **compass** button to display one of eight compass readings and the outside temperature or to exit submenus.

Right Arrow Button

Push and release the **right** arrow button for access to main menus, submenus, or to select a personal setting in the setup menu.

Down Arrow Button

Push and release the **down** arrow button to scroll downward through the submenus.

When the appropriate conditions exist, the following messages display:

- Turn Signal On (with a continuous warning chime after 1 mile (1.6 km) of distance travelled)
- Left Front Turn Signal Lamp Out (with a single chime)
- Left Rear Turn Signal Lamp Out (with a single chime)
- Right Front Turn Signal Lamp Out (with a single chime)
- Right Rear Turn Signal Lamp Out (with a single chime)
- Battery Low (with a single chime)
- Personal Settings Not Avail. — Vehicle is not in PARK (automatic transmission), or vehicle is in motion (manual transmission)
- Door Open (with vehicle graphic showing which door is open. A single chime sounds if the vehicle is in motion)
- Doors Open (with vehicle graphic showing which doors are open. A single chime sounds if the vehicle is in motion)
- Gate (with vehicle graphic showing the liftgate open and a single chime)
- Headlamps or Park Lamps On
- Remote Start Aborted — Door Open
- Remote Start Aborted — Hood Open
- Remote Start Aborted — L/Gate Open
- Remote Start Aborted — Fuel Low
- Remote Start Aborted — System Fault
- Key In Ignition

- Low Tire
- Low Tire Pressure Display for Premium TPM System
- Service TPM System

Oil Change Indicator System

Your vehicle is equipped with an engine oil change indicator system. The "Oil Change Required" message will display in the instrument cluster display for approximately five seconds after a single chime has sounded to indicate the next scheduled oil change interval. The engine oil change indicator system is duty-cycle based, which means the engine oil change interval may fluctuate dependent upon your personal driving style.

Unless reset, this message will continue to display each time you place the ignition in the ON/RUN position. To turn off the message temporarily, push and release the Trip Odometer button on the instrument cluster. To reset the oil change indicator system (after performing the scheduled maintenance), refer to the following procedure.

1. Place the ignition in the ON position. **Do not start the engine.**
2. Fully push the accelerator pedal, slowly, three times within ten seconds.
3. Place the ignition in the OFF/LOCK position.

NOTE: If the indicator message illuminates when you start the vehicle, the oil change indicator system did not reset. If necessary, repeat this procedure.

Instrument Cluster Display Functions

- Compass/Temperature/Audio
- Average Fuel Economy
- Distance To Empty (DTE)
- Units In
- Elapsed Time
- Tire Pressure Monitor (TPM)
- Personal Settings

To Reset The Display

Pushing and holding the **right** arrow button once will clear the function currently being displayed. Reset will only occur if a resettable function is currently being displayed. To reset all resettable functions, push and release the **right** arrow button a second time within three seconds of resetting the currently displayed function. Reset ALL will be displayed during this three-second window.

Compass/Temperature/Audio

Push and release the **compass** button to display one of eight compass headings to indicate the direction the vehicle is facing, the outside temperature, and the current radio station.

Average Fuel Economy

Shows the average fuel economy since the last reset (pushing and holding the **right** arrow button as prompted in the instrument cluster display to reset). When the fuel economy is reset, the display will read "RESET" or show dashes for two seconds. Then, the history information will be erased, and the averaging will continue from the last fuel reading before the reset.

Distance To Empty (DTE)

Shows the estimated distance that can be traveled with the fuel remaining in the tank. This estimated distance is determined by a weighted average of the instantaneous and average fuel economy, according to the current fuel tank level. This is not resettable.

NOTE: Significant changes in driving style or vehicle loading will greatly affect the actual drivable distance of the vehicle, regardless of the DTE displayed value.

When the DTE value is less than 30 miles (48 km) estimated driving distance, the DTE display will change to a text display of "LOW FUEL." This display will continue until the vehicle runs out of fuel. Adding a significant amount of fuel to the vehicle will turn off the "LOW FUEL" text and a new DTE value will be displayed, based on the current values in the DTE calculation and the current fuel tank level.

Tire Pressure Monitor (TPM)

Refer to "Tire Pressure Monitoring System (TPMS)" in "Safety" for system operation.

Elapsed Time

Shows the total elapsed time of travel since the last reset. Elapsed time will increment when the ignition is placed in the RUN/START position.

Elapsed time is displayed as follows:

hours: minutes: seconds

Elapsed time can be reset by pushing and holding the **right** arrow button (as prompted in the display). Upon reset, all digits will change to zeros, and time will start again if the ignition is in the RUN or START position.

Display Units Of Measure In

To make your selection, push and release the **right** arrow button until "US" or "METRIC" appears.

Personal Settings (Customer-Programmable Features)

This allows the driver to set and recall features when the transmission is in PARK (automatic transmission) or the vehicle is stopped (manual transmission).

Push and release the **MENU** or **down** arrow button until "Personal Settings" is displayed in the instrument cluster display then push and release the **right** arrow button.

Use the **right** arrow button to highlight your MENU/SUBMENU choices:

Language

When in this display, you may select different languages for all display nomenclature, including the trip functions. Pushing the **right** arrow button while in this display selects English, Espanol, Deutsch, Italiano, Francais, or NL depending on availability. As you continue, the displayed information will be shown in the selected language.

Auto Lock Doors — If Equipped

When ON is selected, all doors lock automatically when the speed of the vehicle reaches 15 MPH (24 km/h). Push and hold the **right** arrow button when in this display until "ON" or "OFF" appears to make your selection.

Auto Unlock On Exit

When ON is selected, all the vehicle's doors will unlock when the driver's door is opened, if the vehicle is stopped (manual transmission) or the vehicle is stopped and the transmission is in the PARK or NEUTRAL position (automatic transmission). Push and hold the **right** arrow button when in this display until "ON" or "OFF" appears to make your selection.

Key Fob Unlock

When Driver's Door 1st is selected, only the driver's door will unlock on the first push of the key fob unlock button and require a second push to unlock the remaining locked doors. When Remote Unlock All Doors is selected, all of the doors will unlock at the first push of the key fob unlock button. Push and hold the **right** arrow button when in this display until "Driver's Door 1st" or "All Doors" appears to make your selection.

Flash Lamps With Lock

When ON is selected, the front and rear turn signals will flash when the doors are locked or unlocked using the key fob. This feature may be selected with or without the sound horn with lock feature selected. Push and hold the **right** arrow button when in this display until "ON" or "OFF" appears to make your selection.

Sound Horn With Lock

When ON is selected, a short horn sound will occur when the key fob lock button is pushed. This feature may be selected with or without the Flash Lights with Lock feature. Push and hold the **right** arrow button when in this display until "ON" or "OFF" appears to make your selection.

Headlamp Off Delay

When this feature is selected the driver can choose to have the headlights remain on for 0, 30, 60, or 90 seconds when exiting the vehicle. Push and hold the **right** arrow button when in this display until 0, 30, 60, or 90 appears to make your selection.

Headlamps With Wipers (Available With Auto Headlights Only)

When on is selected, and the headlight switch is in the AUTO position, the headlights will turn on approximately ten seconds after the wipers are turned on. If the headlights were turned on by this feature, they will also turn off when the wipers are turned off. To make your selection, push and release the **right** arrow button until "ON" or "OFF" appears.

NOTE: Turning the headlights on during the daytime causes the instrument panel lights to dim. To increase the brightness, refer to "Lights" in "Getting To Know Your Vehicle."

Key Off Power Delay

When this feature is selected the power window switches, radio, Uconnect phone, power sunroof, and power outlets will remain active for up to 10 minutes after the ignition switch has been turned OFF. Opening either front vehicle door will cancel this feature. Push and hold the **right** arrow button when in this display until "OFF," "45 sec.", "5 min.", or "10 min." appears to make your selection.

Illuminated Approach

When this feature is selected, the headlights will activate and remain on for up to 90 seconds when the doors are unlocked using the key fob. Push and hold the **right** arrow button when in this display until "OFF," "30 sec," "60 sec," or "90 sec." appears to make your selection.

Hill Start Assist (HSA) — If Equipped

When "On" is selected, the HSA system is active. Refer to "Electronic Brake Control System" in "Safety" for system function and operating information. To make your selection, push and release the **right** arrow button until "On" or "Off" appears.

Display Units In

The instrument cluster display, odometer, and Uconnect GPS system units can be changed between US and Metric.

Push and hold the **right** arrow button when in this display until "US" or "METRIC" appears to make your selection.

Automatic Compass Calibration

This compass is self-calibrating, which eliminates the need to set the compass manually. When the vehicle is new, the compass may appear erratic, and the instrument cluster display will display "CAL" until the compass is calibrated.

You may also calibrate the compass by completing one or more 360 – degree turns (in an area free from large metal or metallic objects) until the "CAL" message displayed in the instrument cluster display turns off. The compass will now function normally.

NOTE: A good calibration requires a level surface and an environment free from large metallic objects such as buildings, bridges, underground cables, railroad tracks, etc.

Manual Compass Calibration

If the compass appears erratic and the "CAL" indicator does not appear in the instrument cluster display, you must put the compass into the Calibration Mode manually as follows:

1. Start the engine. Leave the gear selector in PARK in order to enter the instrument cluster display Programming Menus.
2. Push and release the **MENU** button until the Personal Settings (Customer-Programmable Features) menu displays in the instrument cluster display.
3. Push and release the **down** arrow button until "Calibrate Compass" displays in the instrument cluster display.

4. Push and release the **right** arrow button to start the calibration. The "CAL" indicator will display in the instrument cluster display.

5. Complete one or more 360 – degree turns (in an area free from large metal or metallic objects) until the "CAL" indicator turns off. The compass will now function normally.

Compass Variance

Compass Variance is the difference between Magnetic North and Geographic North. To compensate for the differences, the variance should be set for the zone where the vehicle is driven, per the zone map. Once properly set, the compass will automatically compensate for the differences and provide the most accurate compass heading.

NOTE: Magnetic materials should be kept away from the top of the right rear quarter window. This is where the compass sensor is located.

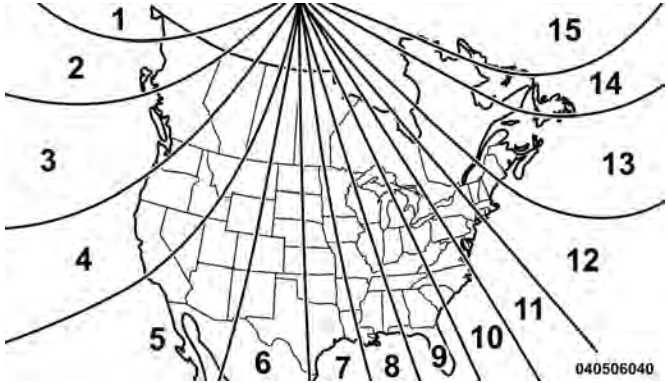

Compass Variance Map

1. Turn the ignition switch ON.

2. Push and hold the **compass** button for approximately two seconds.

3. Push and release the **down** arrow button until "Compass Variance" message and the last variance zone number displays in the instrument cluster display.

4. Push and release the **right** arrow button until the proper variance zone is selected according to the map.

5. Push and release the **compass** button to exit.

WARNING/INDICATOR LIGHTS AND MESSAGES

The warning/indicator light switches on in the instrument panel together with a dedicated message and/or acoustic signal when applicable. These indications are indicative and precautionary and as such must not be considered as exhaustive and/or alternative to the information contained in the Owner Manual, which you are advised to read carefully in all cases. Always refer to the information in this chapter in the event of a failure indication.

All active telltales will display first, if applicable. The system check menu may appear different based upon equipment options and current vehicle status. Some telltales are optional and may not appear.

Red Telltale Lights

Seat Belt Reminder Warning Light

The following warning lamps and indicators will alert you to a vehicle condition that may become serious. Some lamps will illuminate when you start your vehicle to make sure they work. If any lamps remain on after starting your vehicle, refer to the respective system warning lamp for further information.

Red Telltale Light	What It Means
	Seat Belt Reminder Warning Light When the ignition switch is first turned to ON/RUN, this light will turn on for four to eight seconds as a bulb check. During the bulb check, if the driver's or passenger seat belt is unbuckled, a chime will sound. After the bulb check or when driving, if the driver's seat belt remains unbuckled, the Seat Belt Reminder Light will flash or remain on continuously and a chime will sound. Refer to "Occupant Restraint Systems" in "Safety" for further information.

Air Bag Warning Light

Red Telltale Light	What It Means
	Air Bag Warning Light This light will turn on for four to eight seconds as a bulb check when the ignition switch is first turned to ON/RUN. If the light is either not on during startup, stays on, or turns on while driving, have the system inspected at an authorized dealer as soon as possible. This light will illuminate with a single chime when a fault with the Air Bag Warning Light has been detected, it will stay on until the fault is cleared. If the light comes on intermittently or remains on while driving, have an authorized dealer service the vehicle immediately. Refer to “Occupant Restraint Systems” in “Safety” for further information.

Brake Warning Light

Red Telltale Light	What It Means
BRAKE English Metric	**Brake Warning Light** This light monitors various brake functions, including brake fluid level and parking brake application. If the brake light turns on it may indicate that the parking brake is applied, that the brake fluid level is low, or that there is a problem with the anti-lock brake system reservoir. If the light remains on when the parking brake has been disengaged, and the fluid level is at the full mark on the master cylinder reservoir, it indicates a possible brake hydraulic system malfunction or that a problem with the Brake Booster has been detected by the Anti-Lock Brake System (ABS) / Electronic Stability Control (ESC) system. In this case, the light will remain on until the condition has been corrected. If the problem is related to the brake booster, the ABS pump will run when applying the brake, and a brake pedal pulsation may be felt during each stop.

The dual brake system provides a reserve braking capacity in the event of a failure to a portion of the hydraulic system. A leak in either half of the dual brake system is indicated by the Brake Warning Light, which will turn on when the brake fluid level in the master cylinder has dropped below a specified level.

The light will remain on until the cause is corrected.

NOTE: The light may flash momentarily during sharp cornering maneuvers, which change fluid level conditions. The vehicle should have service performed, and the brake fluid level checked.

If brake failure is indicated, immediate repair is necessary.

WARNING!

Driving a vehicle with the red brake light on is dangerous. Part of the brake system may have failed. It will take longer to stop the vehicle. You could have a collision. Have the vehicle checked immediately.

Vehicles equipped with the Anti-Lock Brake System (ABS) are also equipped with Electronic Brake Force Distribution (EBD). In the event of an EBD failure, the Brake Warning Light will turn on along with the ABS Light. Immediate repair to the ABS system is required.

Operation of the Brake Warning Light can be checked by turning the ignition switch from the OFF position to the ON/RUN position. The light should illuminate for approximately two seconds. The light should then turn off unless the parking brake is applied or a brake fault is detected. If the light does not illuminate, have the light inspected by an authorized dealer.

The light also will turn on when the parking brake is applied with the ignition switch in the ON/RUN position.

NOTE: This light shows only that the parking brake is applied. It does not show the degree of brake application.

Vehicle Security Warning Light

Red Telltale Light	What It Means
	Vehicle Security Warning Light This light will flash at a fast rate for approximately 15 seconds when the vehicle security alarm is arming, and then will flash slowly until the vehicle is disarmed.

Oil Pressure Warning Light

Red Telltale Light	What It Means
	Oil Pressure Warning Light This light indicates low engine oil pressure. If the light turns on while driving, stop the vehicle and shut off the engine as soon as possible. A chime will sound when this light turns on. Do not operate the vehicle until the cause is corrected. This light does not indicate how much oil is in the engine. The engine oil level must be checked under the hood.

Battery Charge Warning Light

Red Telltale Light	What It Means
	Battery Charge Warning Light This light illuminates when the battery is not charging properly. If it stays on while the engine is running, there may be a malfunction with the charging system. Contact your authorized dealer as soon as possible. This indicates a possible problem with the electrical system or a related component. If jump starting is required, refer to "Jump-Starting" in "In Case Of Emergency."

Electronic Throttle Control (ETC) Warning Light

Red Telltale Light	What It Means
	Electronic Throttle Control (ETC) Warning Light This light informs you of a problem with the Electronic Throttle Control (ETC) system. If a problem is detected while the vehicle is running, the light will either stay on or flash depending on the nature of the problem. Cycle the ignition when the vehicle is safely and completely stopped and the transmission is placed in the PARK position. The light should turn off. If the light remains on with the vehicle under power, your vehicle will usually be drivable; however, see an authorized dealer for service as soon as possible. If the light continues to flash when the vehicle is under power, immediate service is required and you may experience reduced performance, and your vehicle may require towing. The light will come on when the ignition is placed in the ON/RUN position and remain on briefly as a bulb check. If the light does not come on during starting, have the system checked by an authorized dealer.

Yellow Telltale Lights

Engine Malfunction Warning Light

Yellow Telltale Light	What It Means
	Vehicle Check/Malfunction Indicator Light (MIL) The Vehicle Check/Malfunction Indicator Light (MIL) is a part of an Onboard Diagnostic System called OBD II that monitors emissions control systems. The light will illuminate when the ignition is in the ON position before vehicle start up. If the bulb does not come on when placing the ignition in the ON/RUN position, have the condition checked promptly. Certain conditions, such as a loose or missing gas cap, poor quality fuel, etc., may illuminate the light after vehicle start. The vehicle should be serviced if the light stays on through several typical driving styles. In most situations, the vehicle will drive normally and will not require towing. When the vehicle is running, the MIL may flash to alert serious conditions that could lead to immediate loss of power or severe catalytic converter damage. The vehicle should be serviced as soon as possible if this occurs.

WARNING!

A malfunctioning catalytic converter, as referenced above, can reach higher temperatures than in normal operating conditions. This can cause a fire if you drive slowly or park over flammable substances such as dry plants, wood, cardboard, etc. This could result in death or serious injury to the driver, occupants or others.

CAUTION!

Prolonged driving with the Malfunction Indicator Light (MIL) on could cause damage to the vehicle control system. It also could affect fuel economy and driveability. If the MIL is flashing, severe catalytic converter damage and power loss will soon occur. Immediate service is required.

Tire Pressure Monitoring System (TPMS) Warning Light

Yellow Telltale Light	What It Means
	Tire Pressure Monitoring System (TPMS) Warning Light The warning light switches on and a message is displayed to indicate that the tire pressure is lower than the recommended value and/or that slow pressure loss is occurring. In these cases, optimal tire duration and fuel consumption may not be guaranteed. Should one or more tires be in the condition mentioned above, the display will show the indications corresponding to each tire in sequence.

CAUTION!

Do not continue driving with one or more flat tires as handling may be compromised. Stop the vehicle,

(Continued)

CAUTION! ***(Continued)***

avoiding sharp braking and steering. Repair immediately using the dedicated tire repair kit and contact your authorized dealer as soon as possible.

Each tire, including the spare (if provided), should be checked monthly when cold and inflated to the inflation pressure recommended by the vehicle manufacturer on the vehicle placard or tire inflation pressure label. (If your vehicle has tires of a different size than the size indicated on the vehicle placard or tire inflation pressure label, you should determine the proper tire inflation pressure for those tires.)

As an added safety feature, your vehicle has been equipped with a tire pressure monitoring system (TPMS) that illuminates a low tire pressure telltale when one or more of your tires is significantly under-inflated. Accordingly, when the low tire pressure telltale illuminates, you should stop and check your tires as soon as possible, and inflate them to the proper pressure. Driving on a significantly under-inflated tire causes the tire to overheat and can lead to tire failure. Under-inflation also reduces fuel efficiency and tire tread life, and may affect the vehicle's handling and stopping ability.

Please note that the TPMS is not a substitute for proper tire maintenance, and it is the driver's responsibility to maintain correct tire pressure, even if under-inflation has not reached the level to trigger illumination of the TPMS low tire pressure telltale.

Your vehicle has also been equipped with a TPMS malfunction indicator to indicate when the system is not operating properly. The TPMS malfunction indicator is combined with the low tire pressure telltale. When the system detects a malfunction, the telltale will flash for approximately one minute and then remain continuously illuminated. This sequence will continue upon subsequent vehicle start-ups as long as the malfunction exists. When the malfunction indicator is illuminated, the system may not be able to detect or signal low tire pressure as intended. TPMS malfunctions may occur for a variety of reasons, including the installation of replacement or alternate tires or wheels on the vehicle that prevent the TPMS from functioning properly. Always check the TPMS malfunction telltale after replacing one or more tires or wheels on your vehicle to ensure that the replacement or alternate tires and wheels allow the TPMS to continue to function properly.

CAUTION!

The TPMS has been optimized for the original equipment tires and wheels. TPMS pressures and warning have been established for the tire size equipped on your vehicle. Undesirable system operation or sensor damage may result when using replacement equipment that is not of the same size, type, and/or style. Aftermarket wheels can cause sensor damage. Using aftermarket tire sealants may cause the Tire Pressure Monitoring System (TPMS) sensor to become inoperable. After using an aftermarket tire sealant it is recommended that you take your vehicle to an authorized dealer to have your sensor function checked.

Electronic Stability Control (ESC) OFF Indicator Light — If Equipped

Yellow Telltale Light	What It Means
	Electronic Stability Control (ESC) OFF Indicator Light — If Equipped This light indicates the Electronic Stability Control (ESC) is off.

Electronic Stability Control (ESC) Indicator Light

Yellow Telltale Light	What It Means
	Electronic Stability Control (ESC) Indicator Light — If Equipped The "ESC Indicator Light" in the instrument cluster will come on when the ignition is placed in the ON/RUN position. It should go out when the engine is running. If the "ESC Indicator Light" comes on continuously with the engine running, a malfunction has been detected in the ESC system. If this light remains on after several ignition cycles, and the vehicle has been driven several miles (kilometers) at speeds greater than 30 mph (48 km/h), see your authorized dealer as soon as possible to have the problem diagnosed and corrected. • The "ESC Off Indicator Light" and the "ESC Indicator Light" come on momentarily each time the ignition switch is placed in the ON/RUN position. • Each time the ignition is placed in the ON/RUN position, the ESC system will be ON, even if it was turned off previously. • The ESC system will make buzzing or clicking sounds when it is active. This is normal; the sounds will stop when ESC becomes inactive following the maneuver that caused the ESC activation. **NOTE:** This telltale indicates that an ESC event is active.

Anti-Lock Brake (ABS) Indicator Light

Yellow Telltale Light	What It Means
ABS	**Anti-Lock Brake (ABS) Indicator Light** This light monitors the Anti-Lock Brake System (ABS). The light will turn on when the ignition switch is placed in the ON/RUN position and may stay on for as long as four seconds. If the ABS light remains on or turns on while driving, then the Anti-Lock portion of the brake system is not functioning and service is required. However, the conventional brake system will continue to operate normally if the brake warning light is not on. If the ABS light is on, the brake system should be serviced as soon as possible to restore the benefits of Anti-Lock Brakes. If the ABS light does not turn on when the ignition switch is placed in the ON/RUN position, have the light inspected by an authorized dealer.

Low Fuel Warning Light

Yellow Telltale Light	What It Means
	Low Fuel Indicator Light When the fuel level reaches approximately 2.4 gal (9.1 L) this light will turn on, and remain on until fuel is added.

4WD Low Indicator Light — If Equipped

Yellow Telltale Light	What It Means
4WD LOW	**4WD Low Indicator Light** This light alerts the driver that the vehicle is in the four-wheel drive LOW mode. The front and rear driveshafts are mechanically locked together forcing the front and rear wheels to rotate at the same speed. Low range provides a greater gear reduction ratio to provide increased torque at the wheels. Refer to “Four-Wheel Drive Operation — If Equipped” in “Starting And Operating” for further information on four-wheel drive operation and proper use.

Loose Fuel Filler Cap Indicator Light — If Equipped

Yellow Telltale Light	What It Means
	Loose Fuel Filler Cap Indicator Light — If Equipped This light will illuminate when fuel filler cap is loose. Properly close the filler cap to disengage the light. If the light does not turn off, please see your authorized dealer.

Low Washer Fluid Indicator Light — If Equipped

Yellow Telltale Light	What It Means
	Low Washer Fluid Indicator Light — If Equipped This indicator will illuminate when the windshield washer fluid is low.

Transmission Temperature Indicator Light

Yellow Telltale Light	What It Means
	Transmission Temperature Indicator Light This light indicates that the transmission fluid temperature is running hot. This may occur with severe usage, such as trailer towing. If this light turns on, safely pull over and stop the vehicle. Then, shift the transmission into NEUTRAL and run the engine at idle or faster until the light turns off.

WARNING!

If you continue operating the vehicle when the Transmission Temperature Warning Light is illuminated you could cause the fluid to boil over, come in contact with hot engine or exhaust components and cause a fire.

CAUTION!

Continuous driving with the Transmission Temperature Warning Light illuminated will eventually cause severe transmission damage or transmission failure.

Green Telltale Lights

Turn Signal Warning Lights

Green Telltale Light	What It Means
	Turn Signal Indicator Lights The instrument cluster arrow will flash independently for the left or right turn signal as selected, as well as the exterior turn signal lamp(s) (front and rear) as selected when the multifunction lever is moved down (left) or up (right). **NOTE:** • A continuous chime will sound if the vehicle is driven more than 1 mile (1.6 km) with either turn signal on. • Check for an inoperative outside light bulb if either indicator flashes at a rapid rate.

Park/Headlight ON Indicator Light

Green Telltale Light	What It Means
	Park/Headlight ON Indicator Light This indicator will illuminate when the park lights or headlights are turned on.

Front Fog Indicator Light — If Equipped

Green Telltale Light	What It Means
	Front Fog Indicator Light This indicator will illuminate when the front fog lights are on.

Blue Telltale Lights

High Beam Indicator Light

Blue Telltale Light	What It Means
	High Beam Indicator Light This indicator shows that the high beam headlights are on. Push the multifunction control lever away from you to switch the headlights to high beam. Pull the lever toward you to switch the headlights back to low beam. Pull the lever toward you for a temporary high beam on, "flash to pass" scenario.

White Telltale Lights

Cruise Control On Indicator Light

White Telltale Light	What It Means
CRUISE	**Cruise Control On Indicator Light** This indicator shows when the Speed Control System is turned on.

Hill Descent Control (HDC) Indicator Light — If Equipped

White Telltale Light	What It Means
	Hill Descent Control (HDC) Indicator Light This indicator shows when the Hill Descent Control (HDC) feature is turned on. The lamp will be on solid when HDC is armed. HDC can only be armed when the transfer case is in the "4WD LOW" position and the vehicle speed is less then 30 mph (48 km/h). If these conditions are not met while attempting to use the HDC feature, the HDC indicator light will flash on/off.

MINI-TRIP COMPUTER — IF EQUIPPED

The Mini-Trip Computer is located in the instrument cluster and features a driver-interactive trip information and temperature display.

NOTE: The system will display the last known outside temperature when starting the vehicle and may need to be driven several minutes before the updated temperature is displayed. Engine temperature can also affect the displayed temperature; therefore, temperature readings are not updated when the vehicle is not moving.

Control Buttons

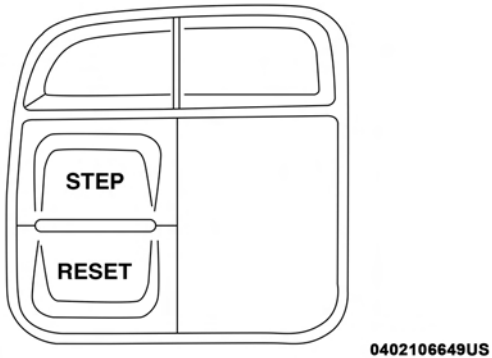

Mini-Trip Control Buttons

STEP Button

Push the **STEP** button located on the steering wheel to scroll through sub menus (i.e., Temperature, Trip Functions: Odometer, Trip A, Trip B).

RESET Button

To reset the display shown, turn the ignition to the ON position, then push and hold the **RESET** button located on the steering wheel.

The following displays can be reset or changed:

- Trip A
- Trip B

Trip Odometer (ODO)

This display shows the distance traveled since the last reset. Push and release the **STEP** button on the instrument cluster to switch from odometer, to Trip A or Trip B.

Trip A

Shows the total distance traveled for Trip A since the last reset.

Trip B

Shows the total distance traveled for Trip B since the last reset.

ONBOARD DIAGNOSTIC SYSTEM — OBD II

Your vehicle is equipped with a sophisticated Onboard Diagnostic system called OBD II. This system monitors the performance of the emissions, engine, and automatic transmission control systems. When these systems are operating properly, your vehicle will provide excellent performance and fuel economy, as well as emissions well within current government regulations.

If any of these systems require service, the OBD II system will turn on the Malfunction Indicator Light (MIL). It will also store diagnostic codes and other information to assist your service technician in making repairs. Although your vehicle will usually be drivable and not need towing, see your authorized dealer for service as soon as possible.

CAUTION!

- **Prolonged driving with the MIL on could cause further damage to the emission control system. It could also affect fuel economy and driveability. The vehicle must be serviced before any emissions tests can be performed.**
- **If the MIL is flashing while the vehicle is running, severe catalytic converter damage and power loss will soon occur. Immediate service is required.**

Onboard Diagnostic System (OBD II) Cybersecurity

Your vehicle is required to have an Onboard Diagnostic system (OBD II) and a connection port to allow access to information related to the performance of your emissions controls. Authorized service technicians may need to access this information to assist with the diagnosis and service of your vehicle and emissions system.

WARNING!

- **ONLY an authorized service technician should connect equipment to the OBD II connection port in order to diagnose or service your vehicle.**
- **If unauthorized equipment is connected to the OBD II connection port, such as a driver-behavior tracking device, it may:**
  - **Be possible that vehicle systems, including safety related systems, could be impaired or a loss of vehicle control could occur that may result in an accident involving serious injury or death.**
  - **Access, or allow others to access, information stored in your vehicle systems, including personal information.**

For further information, refer to “Cybersecurity” in “Multimedia”.

Loose Fuel Filler Cap Message

After fuel is added, the vehicle diagnostic system can determine if the fuel filler cap is possibly loose or improperly installed. A “gASCAP” message will be displayed in the instrument cluster. Tighten the gas cap until a “clicking” sound is heard. This is an indication that the gas cap is properly tightened. Push the trip odometer RESET

button to turn off the message. If the problem persists, the message will appear the next time the vehicle is started. This might indicate a damaged cap. If the problem is detected twice in a row, the system will turn on the MIL. Resolving the problem will turn the MIL light off.

EMISSIONS INSPECTION AND MAINTENANCE PROGRAMS

In some localities, it may be a legal requirement to pass an inspection of your vehicle's emissions control system. Failure to pass could prevent vehicle registration.

For states that require an Inspection and Maintenance (I/M), this check verifies the "Malfunction Indicator Light (MIL)" is functioning and is not on when the engine is running, and that the OBD II system is ready for testing.

Normally, the OBD II system will be ready. The OBD II system may **not** be ready if your vehicle was recently serviced, recently had a dead battery or a battery replacement. If the OBD II system should be determined not ready for the I/M test, your vehicle may fail the test.

Your vehicle has a simple ignition actuated test, which you can use prior to going to the test station. To check if your vehicle's OBD II system is ready, you must do the following:

1. Cycle the ignition switch to the ON position, but do not crank or start the engine.

NOTE: If you crank or start the engine, you will have to start this test over.

2. As soon as you cycle the ignition switch to the ON position, you will see the "Malfunction Indicator Light (MIL)" symbol come on as part of a normal bulb check.
3. Approximately 15 seconds later, one of two things will happen:

- The MIL will flash for about 10 seconds and then return to being fully illuminated until you turn OFF the ignition or start the engine. This means that your vehicle's OBD II system is **not ready** and you should **not** proceed to the I/M station.
- The MIL will not flash at all and will remain fully illuminated until you place the ignition in the off position or start the engine. This means that your vehicle's OBD II system is **ready** and you can proceed to the I/M station.

If your OBD II system is **not ready,** you should see your authorized dealer or repair facility. If your vehicle was recently serviced or had a battery failure or replacement, you may need to do nothing more than drive your vehicle as you normally would in order for your OBD II system to update. A recheck with the above test routine may then indicate that the system is **now ready**.

Regardless of whether your vehicle's OBD II system is ready or not, if the MIL is illuminated during normal vehicle operation you should have your vehicle serviced before going to the I/M station. The I/M station can fail your vehicle because the MIL is on with the engine running.

SAFETY

CONTENTS

■ SAFETY FEATURES 130
- □ Anti-Lock Brake System (ABS) 130
- □ Electronic Brake Control System 131

■ AUXILIARY DRIVING SYSTEMS 139
- □ Tire Pressure Monitoring System (TPMS) 139

■ OCCUPANT RESTRAINT SYSTEMS 147
- □ Occupant Restraint Systems Features 147
- □ Important Safety Precautions 147
- □ Seat Belt Systems 148
- □ Supplemental Restraint Systems (SRS) 163
- □ Child Restraints 174
- □ Transporting Pets 190

■ SAFETY TIPS 190
- □ Transporting Passengers 190
- □ Exhaust Gas 190
- □ Safety Checks You Should Make Inside The Vehicle 191
- □ Periodic Safety Checks You Should Make Outside The Vehicle 193

SAFETY FEATURES

Anti-Lock Brake System (ABS)

The Anti-Lock Brake System (ABS) provides increased vehicle stability and brake performance under most braking conditions. The system automatically prevents wheel lock, and enhances vehicle control during braking.

The ABS performs a self-check cycle to ensure that the ABS is working properly each time the vehicle is started and driven. During this self-check, you may hear a slight clicking sound as well as some related motor noises.

ABS is activated during braking when the system detects one or more wheels begin to lock. Road conditions such as ice, snow, gravel, bumps, railroad tracks, loose debris, or panic stops may increase the likelihood of ABS activation(s).

You also may experience the following when ABS activates:

- The ABS motor noise (it may continue to run for a short time after the stop).
- The clicking sound of solenoid valves.
- Brake pedal pulsations.
- A slight drop of the brake pedal at the end of the stop.

These are all normal characteristics of ABS.

WARNING!

- **The ABS contains sophisticated electronic equipment that may be susceptible to interference caused by improperly installed or high output radio transmitting equipment. This interference can cause possible loss of anti-lock braking capability. Installation of such equipment should be performed by qualified professionals.**
- **Pumping of the Anti-Lock Brakes will diminish their effectiveness and may lead to a collision. Pumping makes the stopping distance longer. Just press firmly on your brake pedal when you need to slow down or stop.**
- **The ABS cannot prevent the natural laws of physics from acting on the vehicle, nor can it increase braking or steering efficiency beyond that afforded by the condition of the vehicle brakes and tires or the traction afforded.**
- **The ABS cannot prevent collisions, including those resulting from excessive speed in turns, following another vehicle too closely, or hydroplaning.**
- **The capabilities of an ABS equipped vehicle must never be exploited in a reckless or dangerous manner that could jeopardize the user's safety or the safety of others.**

ABS is designed to function with the OEM tires. Modification may result in degraded ABS performance.

Anti-Lock Brake Warning Light

The yellow "Anti-Lock Brake Warning Light" will turn on when the ignition is turned to the ON/RUN mode and may stay on for as long as four seconds.

If the "Anti-Lock Brake Warning Light" remains on or comes on while driving, it indicates that the anti-lock portion of the brake system is not functioning and that service is required. However, the conventional brake system will continue to operate normally if the "Brake System Warning Light" is not on.

If the "Anti-Lock Brake Warning Light" is on, the brake system should be serviced as soon as possible to restore the benefits of anti-lock brakes. If the "Anti-Lock Brake Warning Light" does not come on when the ignition is turned to the ON/RUN mode, have the light repaired as soon as possible.

Electronic Brake Control System

Your vehicle is equipped with an advanced Electronic Brake Control system (EBC). This system includes Electronic Brake Force Distribution (EBD), Anti-Lock Brake System (ABS), Brake Assist System (BAS), Hill Start Assist (HSA), Traction Control System (TCS), Electronic Stability Control (ESC), and Electronic Roll Mitigation (ERM). These systems work together to enhance both vehicle stability and control in various driving conditions.

Your vehicle may also be equipped with Hill Descent Control (HDC).

Electronic Brake Force Distribution (EBD)

This function manages the distribution of the braking torque between the front and rear axles by limiting braking pressure to the rear axle. This is done to prevent overslip of the rear wheels to avoid vehicle instability, and to prevent the rear axle from entering ABS before the front axle.

Brake System Warning Light

The red "Brake System Warning Light" will turn on when the ignition is turned to the ON/RUN mode and may stay on for as long as four seconds.

If the "Brake System Warning Light" remains on or comes on while driving, it indicates that the brake system is not functioning properly and that immediate service is required. If the "Brake System Warning Light" does not come on when the ignition is turned to the ON/RUN mode, have the light repaired as soon as possible.

Brake Assist System (BAS)

The BAS is designed to optimize the vehicle's braking capability during emergency braking maneuvers. The system detects an emergency braking situation by sensing the rate and amount of brake application and then applies optimum pressure to the brakes. This can help reduce braking distances. The BAS complements the anti-lock brake system (ABS). Applying the brakes very quickly results in the best BAS assistance. To receive the benefit of the system, you must apply continuous braking pressure during the stopping sequence, (do not "pump" the brakes). Do not reduce brake pedal pressure unless braking is no longer desired. Once the brake pedal is released, the BAS is deactivated.

WARNING!

The Brake Assist System (BAS) cannot prevent the natural laws of physics from acting on the vehicle, nor can it increase the traction afforded by prevailing road conditions. BAS cannot prevent collisions, including those resulting from excessive speed in turns, driving on very slippery surfaces, or hydroplaning. The capabilities of a BAS-equipped vehicle must never be

(Continued)

WARNING! *(Continued)*

exploited in a reckless or dangerous manner, which could jeopardize the user's safety or the safety of others.

Hill Start Assist (HSA)

The HSA system is designed to mitigate roll back from a complete stop while on an incline. If the driver releases the brake while stopped on an incline, HSA will continue to hold the brake pressure for a short period. If the driver does not apply the throttle before this time expires, the system will release brake pressure and the vehicle will roll down the hill as normal.

The following conditions must be met in order for HSA to activate:

- The feature must be enabled.
- The vehicle must be stopped.
- Park brake must be off.
- Driver door must be closed.
- The vehicle must be on a sufficient grade.

- The gear selection must match vehicle uphill direction (i.e., vehicle facing uphill is in forward gear; vehicle backing uphill is in REVERSE gear).
- HSA will work in REVERSE gear and all forward gears. The system will not activate if the transmission is in PARK or NEUTRAL. For vehicles equipped with a manual transmission, if the clutch is pressed, HSA will remain active.

WARNING!

There may be situations where the Hill Start Assist (HSA) will not activate and slight rolling may occur, such as on minor hills or with a loaded vehicle, or while pulling a trailer. HSA is not a substitute for active driving involvement. It is always the driver's responsibility to be attentive to distance to other vehicles, people, and objects, and most importantly brake operation to ensure safe operation of the vehicle under all road conditions. Your complete attention is always required while driving to maintain safe control of your vehicle. Failure to follow these warnings can result in a collision or serious personal injury.

Disabling And Enabling HSA

This feature can be turned on or turned off. To change the current setting using your instrument cluster display, refer to "Instrument Cluster Display" in "Getting To Know Your Instrument Panel" for further information.

For vehicles not equipped with an instrument cluster display, perform the following steps:

1. Center the steering wheel (front wheels pointing straight forward).
2. Shift the transmission into PARK.
3. Apply the parking brake.
4. Start the engine.
5. Rotate the steering wheel slightly more than one-half turn to the left.
6. Push the "ESC Off" button located in the lower switch bank below the climate control four times within 20 seconds. The "ESC Off Indicator Light" should turn on and turn off two times.
7. Rotate the steering wheel back to center and then an additional slightly more than one-half turn to the right.

8. Turn the ignition to the OFF mode and then back to ON. If the sequence was completed properly, the "ESC Off Indicator Light" will blink several times to confirm HSA is disabled.

9. Repeat these steps if you want to return this feature to its previous setting.

Traction Control System (TCS)

This system monitors the amount of wheel spin of each of the driven wheels. If wheel spin is detected, the TCS may apply brake pressure to the spinning wheel(s) and/or reduce engine power to provide enhanced acceleration and stability. A feature of the TCS, Brake Limited Differential (BLD), functions similar to a limited slip differential and controls the wheel spin across a driven axle. If one wheel on a driven axle is spinning faster than the other, the system will apply the brake of the spinning wheel. This will allow more engine torque to be applied to the wheel that is not spinning. BLD may remain enabled even if TCS and ESC are in a reduced mode.

Electronic Stability Control (ESC)

This system enhances directional control and stability of the vehicle under various driving conditions. ESC corrects for oversteering or understeering of the vehicle by applying the brake of the appropriate wheel(s) to assist in counteracting the oversteer or understeer condition. Engine power may also be reduced to help the vehicle maintain the desired path.

ESC uses sensors in the vehicle to determine the vehicle path intended by the driver and compares it to the actual path of the vehicle. When the actual path does not match the intended path, ESC applies the brake of the appropriate wheel to assist in counteracting the oversteer or understeer condition.

- Oversteer — when the vehicle is turning more than appropriate for the steering wheel position.
- Understeer — when the vehicle is turning less than appropriate for the steering wheel position.

The "ESC Activation/Malfunction Indicator Light" located in the instrument cluster will start to flash as soon as the ESC system becomes active. The "ESC Activation/Malfunction Indicator Light" also flashes when the TCS is active. If the "ESC Activation/Malfunction Indicator Light" begins to flash during acceleration, ease up on the accelerator and apply as little throttle as possible. Be sure to

adapt your speed and driving to the prevailing road conditions.

WARNING!

- **Electronic Stability Control (ESC) cannot prevent the natural laws of physics from acting on the vehicle, nor can it increase the traction afforded by prevailing road conditions. ESC cannot prevent accidents, including those resulting from excessive speed in turns, driving on very slippery surfaces, or hydroplaning. ESC also cannot prevent accidents resulting from loss of vehicle control due to inappropriate driver input for the conditions. Only a safe, attentive, and skillful driver can prevent accidents. The capabilities of an ESC equipped vehicle must never be exploited in a reckless or dangerous manner which could jeopardize the user's safety or the safety of others.**
- **Vehicle modifications, or failure to properly maintain your vehicle, may change the handling characteristics of your vehicle, and may negatively affect the performance of the ESC system. Changes to the steering system, suspension, braking system, tire**

(Continued)

WARNING! *(Continued)*

type and size or wheel size may adversely affect ESC performance. Improperly inflated and unevenly worn tires may also degrade ESC performance. Any vehicle modification or poor vehicle maintenance that reduces the effectiveness of the ESC system can increase the risk of loss of vehicle control, vehicle rollover, personal injury and death.

ESC Operating Modes

The ESC system has three available operating modes for four–wheel drive equipped vehicles and two available operating modes for two–wheel drive equipped vehicles.

Full On (Four-Wheel Drive Models) Or On (Two-Wheel Drive Models)

This is the normal operating mode for ESC. Whenever the vehicle is started, the ESC system will be in this "On" mode. This mode should be used for most driving situations. ESC should only be turned to "Partial Off" or "ESC Off" for specific reasons as noted below.

Partial Off (Four-Wheel Drive Models) Or On (Two-Wheel Drive Models)

This mode is entered by momentarily pushing the "ESC Off" switch. When in "Partial Off" mode, the TCS portion of ESC, except for the "limited slip" feature described in the TCS section, has been disabled, and the "ESC OFF Indicator Light" will be illuminated. All other stability features of ESC function normally. This mode is intended to be used if the vehicle is in deep snow, sand or gravel conditions, and more wheel spin than ESC would normally allow is required to gain traction.

To turn ESC on again, momentarily push the "ESC Off" switch. This will restore the normal "ESC On" mode of operation.

NOTE: To improve the vehicle's traction when driving with snow chains, or starting off in deep snow, sand or gravel, it may be desirable to switch to the "Partial Off" mode by pushing the "ESC Off" switch. Once the situation requiring ESC to be switched to the "Partial Off" mode is overcome, turn ESC back on by momentarily pushing the "ESC Off" switch. This may be done while the vehicle is in motion.

WARNING!

When in "Partial Off" mode, the TCS functionality of ESC (except for the limited slip feature described in the TCS section) has been disabled and the "ESC Off Indicator Light" will be illuminated. When in "Partial Off" mode, the engine power reduction of TCS is disabled, and the enhanced vehicle stability offered by the ESC system is reduced. Trailer Sway control (TSC) (if equipped) is disabled when the ESC system is in the "Partial Off" mode.

Full Off (Four-Wheel Drive Models Only)

This mode is intended for off-highway or off-road use when ESC stability features could inhibit vehicle maneuverability due to trail conditions. This mode is entered by pushing and holding the "ESC Off" switch for five seconds when the vehicle is stopped and the engine is running. After five seconds, the "ESC OFF Indicator Light" will illuminate and the "ESC OFF" message will appear in the odometer. Push and release the Trip Odometer button located on the instrument cluster to clear this message.

In this mode, ESC and TCS, except for the "limited slip" feature described in the TCS section, are turned off until the vehicle reaches a speed of 35 mph (56 km/h). At 35 mph

(56 km/h), the system returns to "Partial Off" mode, as described above. TCS remains off. When the vehicle speed drops below 30 mph (48 km/h), the ESC system shuts off. ESC is deactivated at low vehicle speeds so that it will not interfere with off-road driving however, ESC function returns to provide the stability feature at speeds above 35 mph (56 km/h). The "ESC OFF Indicator Light" will always be illuminated when ESC is off.

To turn ESC on again, momentarily push the "ESC Off" switch. This will restore the "ESC On" mode of operation.

NOTE: The "ESC OFF" message will display and an audible chime will sound when the gear selector is placed into the PARK position from any other position, and then moved out of the PARK position. This will occur even if the message was previously cleared.

WARNING!

In the "Full Off" mode, the engine torque reduction and stability features are disabled. In an emergency evasive maneuver, the ESC system will not engage to assist in maintaining stability. "ESC Off" mode is intended for off-highway or off-road use only.

ESC Activation/Malfunction Indicator Light and ESC OFF Indicator Light

The "ESC Activation/Malfunction Indicator Light" in the instrument cluster will come on when the ignition is turned to the ON mode. It should go out with the engine running. If the "ESC Activation/Malfunction Indicator Light" comes on continuously with the engine running, a malfunction has been detected in the ESC system. If this light remains on after several ignition cycles, and the vehicle has been driven several miles (kilometers) at speeds greater than 30 mph (48 km/h), see your authorized dealer as soon as possible to have the problem diagnosed and corrected.

The "ESC Activation/Malfunction Indicator Light" (located in the instrument cluster) starts to flash as soon as the tires lose traction and the ESC system becomes active. The "ESC Activation/Malfunction Indicator Light" also flashes when TCS is active. If the "ESC Activation/Malfunction Indicator Light" begins to flash during acceleration, ease up on the accelerator and apply as little throttle as possible. Be sure to adapt your speed and driving to the prevailing road conditions.

NOTE:

- The "ESC Activation/Malfunction Indicator Light" and the "ESC OFF Indicator Light" come on momentarily each time the ignition is turned ON.
- Each time the ignition is turned ON, the ESC system will be on even if it was turned off previously.
- The ESC system will make buzzing or clicking sounds when it is active. This is normal; the sounds will stop when ESC becomes inactive following the maneuver that caused the ESC activation.

The "ESC OFF Indicator Light" indicates the customer has elected to have the Electronic Stability Control (ESC) in a reduced mode.

Electronic Roll Mitigation (ERM)

This system anticipates the potential for wheel lift by monitoring the driver's steering wheel input and the speed of the vehicle. When ERM determines that the rate of change of the steering wheel angle and vehicle's speed are sufficient to potentially cause wheel lift, it then applies the appropriate brake and may also reduce engine power to lessen the chance that wheel lift will occur. ERM can only reduce the chance of wheel lift occurring during severe or evasive driving maneuvers; it cannot prevent wheel lift due to other factors, such as road conditions, leaving the roadway, or striking objects or other vehicles.

NOTE: ERM is disabled anytime the ESC is in "Full Off" mode (if equipped). Refer to "Electronic Stability Control (ESC)" in this section for a complete explanation of the available ESC modes.

WARNING!

Many factors, such as vehicle loading, road conditions and driving conditions, influence the chance that wheel lift or rollover may occur. ERM cannot prevent all wheel lift or roll overs, especially those that involve leaving the roadway or striking objects or other vehicles. The capabilities of an ERM-equipped vehicle must never be exploited in a reckless or dangerous manner which could jeopardize the user's safety or the safety of others.

Hill Descent Control (HDC) — If Equipped

This system maintains vehicle speed while descending hills during off-road driving situations. HDC will automatically apply the brakes to control downhill speed to between 4 mph (7 km/h) and 6 mph (9 km/h) depending on terrain.

The system is activated by placing the vehicle in "Off-Road" mode and placing the gear selector in LOW or REVERSE. Refer to "Off-Road Driving Tips" in "Starting And Operating" for further information.

When HDC is properly enabled, the "Hill Decent Control Light" in the instrument cluster will be illuminated.

HDC has the capability to sense terrain and will only activate when the vehicle is descending a hill. It will not activate on level ground. If desired, HDC can be fully deactivated by putting the vehicle into ESC "Full Off" mode. This is done by pushing and holding the "ESC Off" button for five seconds. Refer to "Electronic Stability Control (ESC)" in this section of the manual.

HDC operation can be overridden with brake application to slow the vehicle down below the HDC control speed. Conversely, if more speed is desired during HDC control, the accelerator pedal will increase vehicle speed like normal. When either the brake or the accelerator is released, HDC will control the vehicle back to the original set speed.

HDC is only intended for low speed off-road driving. At vehicle speeds above 31 mph (50 km/h), HDC will no longer function. If the "HDC Indicator Light" begins to flash, this indicates that the brakes are getting too hot and the vehicle should be stopped to allow the brakes to cool.

WARNING!

HDC is only intended to assist the driver in controlling vehicle speed when descending hills. The driver must remain attentive to the driving conditions and is responsible for maintaining a safe vehicle speed.

AUXILIARY DRIVING SYSTEMS

Tire Pressure Monitoring System (TPMS)

The Tire Pressure Monitor System (TPMS) will warn the driver of a low tire pressure based on the vehicle recommended cold placard pressure.

The tire pressure will vary with temperature by about 1 psi (7.0 kPa) for every 12°F (6.5°C). This means that when the outside temperature decreases, the tire pressure will decrease. Tire pressure should always be set based on "cold inflation tire pressure". This is defined as the tire pressure after the vehicle has not been driven for at least three hours, or driven less than 1 mile (1.6 km) after a three hour period. The cold tire inflation pressure must not exceed the maximum inflation pressure molded into the tire sidewall.

Refer to "Tires – General Information" in "Servicing And Maintenance" for information on how to properly inflate the vehicle's tires. The tire pressure will also increase as the vehicle is driven - this is normal and there should be no adjustment for this increased pressure.

The TPMS will warn the driver of a low tire pressure if the tire pressure falls below the low-pressure warning limit for any reason, including low temperature effects, or natural pressure loss through the tire.

The TPMS will continue to warn the driver of low tire pressure as long as the condition exists, and will not turn off until the tire pressure is at or above the recommended cold placard pressure. Once the low tire pressure warning (Tire Pressure Monitoring Telltale Light) illuminates, you must increase the tire pressure to the recommended cold placard pressure in order for the Tire Pressure Monitoring Telltale Light to turn off. The system will automatically update and the Tire Pressure Monitoring Telltale Light will turn off once the system receives the updated tire pressures.

NOTE: When filling warm tires, the tire pressure may need to be increased up to an additional 4 psi (30 kPa) above the recommended cold placard pressure in order to turn the Tire Pressure Monitoring Telltale Light off.

The vehicle may need to be driven for up to 10 minutes above 15 mph (24 km/h) in order for the TPMS to receive this information.

For example, your vehicle may have a recommended cold (parked for more than three hours) placard pressure of 30 psi (207 kPa). If the ambient temperature is 68°F (20°C) and the measured tire pressure is 27 psi (186 kPa), a temperature drop to 20°F (-7°C) will decrease the tire pressure to approximately 23 psi (158 kPa). This tire pressure is sufficiently low enough to turn ON the Tire Pressure Monitoring Telltale Light. Driving the vehicle may cause the tire pressure to rise to approximately 27 psi (186 kPa), but the Tire Pressure Monitoring Telltale Light will still be ON. In this situation, the Tire Pressure Monitoring Telltale Light will turn OFF only after the tires are inflated to the vehicle's recommended cold placard pressure value.

NOTE: When filling warm tires, the tire pressure may need to be increased up to an additional 4 psi (30 kPa) above the recommended cold placard pressure in order to turn the Tire Pressure Monitoring Telltale Light off.

CAUTION!

- **The TPMS has been optimized for the original equipment tires and wheels. TPMS pressures and warning have been established for the tire size equipped on your vehicle. Undesirable system operation or sensor damage may result when using replacement equipment that is not of the same size, type, and/or style. Aftermarket wheels can cause sensor damage.**
- **Using aftermarket tire sealants may cause the Tire Pressure Monitoring System (TPMS) sensor to become inoperable. After using an aftermarket tire sealant it is recommended that you take your vehicle to an authorized dealer to have your sensor function checked.**
- **After inspecting or adjusting the tire pressure always reinstall the valve stem cap. This will prevent moisture and dirt from entering the valve stem, which could damage the TPMS sensor.**

NOTE:

- The TPMS is not intended to replace normal tire care and maintenance or to provide warning of a tire failure or condition.
- The TPMS should not be used as a tire pressure gauge while adjusting your tire pressure.
- Driving on a significantly under-inflated tire causes the tire to overheat and can lead to tire failure. Under-inflation also reduces fuel efficiency and tire tread life, and may affect the vehicle's handling and stopping ability.
- The TPMS is not a substitute for proper tire maintenance, and it is the driver's responsibility to maintain correct tire pressure using an accurate tire gauge, even if under-inflation has not reached the level to trigger illumination of the Tire Pressure Monitoring Telltale Light.
- Seasonal temperature changes will affect tire pressure, and the TPMS will monitor the actual tire pressure in the tire.

Base System

This is the TPMS warning indicator located in the instrument cluster.

The TPMS uses wireless technology with wheel rim mounted electronic sensors to monitor tire pressure levels. Sensors, mounted to each wheel as part of the valve stem, transmit tire pressure readings to the Receiver Module.

NOTE: It is particularly important for you to check the tire pressure in all of the tires on your vehicle regularly and to maintain the proper pressure.

The TPMS consists of the following components:

- Receiver Module.
- Four Tire Pressure Monitoring Sensors.
- Tire Pressure Monitoring Telltale Light.

Tire Pressure Monitoring Low Pressure Warnings

The Tire Pressure Monitoring Telltale Light will illuminate in the instrument cluster, a LOW TIRE message will be displayed for a minimum of five seconds, and an audible chime will be activated when one or more of the four active road tire pressures are low. Should this occur, you should stop as soon as possible, check the inflation pressure of each tire on your vehicle, and inflate each tire to the vehicle's recommended cold placard pressure value. The system will automatically update and the Tire Pressure Monitoring Light will extinguish and the LOW TIRE message will turn off once the updated tire pressures have been received.

NOTE: When filling warm tires, the tire pressure may need to be increased up to an additional 4 psi (30 kPa) above the recommended cold placard pressure in order to turn the Tire Pressure Monitoring Telltale Light off.
The vehicle may need to be driven for up to 10 minutes above 15 mph (24 km/h) to receive this information.

Check TPMS Warnings

The Tire Pressure Monitoring Telltale Light will flash on and off for 75 seconds and remain on solid when a system fault is detected. The system fault will also sound a chime. If the ignition key is cycled, this sequence will repeat providing the system fault still exists. The Tire Pressure Monitoring Telltale Light will turn off when the fault condition no longer exists. A system fault can occur with any of the following scenarios:

1. Jamming due to electronic devices or driving next to facilities emitting the same radio frequencies as the TPM sensors.
2. Installing some form of aftermarket window tinting that affects radio wave signals.
3. Snow or ice around the wheels or wheel housings.
4. Using tire chains on the vehicle.
5. Using wheels/tires not equipped with TPM sensors.

NOTE: Your vehicle is equipped with a compact spare wheel and tire assembly.

1. The compact spare tire does not have a tire pressure monitoring sensor. Therefore, the TPMS will not monitor the tire pressure in the compact spare tire.
2. If you install the compact spare tire in place of a road tire that has a pressure below the low-pressure warning limit, upon the next ignition key cycle, a chime will sound and the Tire Pressure Monitoring Telltale Light and LOW TIRE message will still turn ON due to the low tire.
3. However, after driving the vehicle for up to 10 minutes above 15 mph (24 km/h), the Tire Pressure Monitoring Telltale Light will flash on and off for 75 seconds and then remain on solid.
4. For each subsequent ignition key cycle, a chime will sound and the Tire Pressure Monitoring Telltale Light will flash on and off for 75 seconds and then remain on solid.
5. Once you repair or replace the original road tire and reinstall it on the vehicle in place of the compact spare tire, the TPMS will update automatically and the Tire Pressure Monitoring Telltale Light will turn OFF, as long as no tire pressure is below the low-pressure warning limit in any of the four active road tires. The vehicle may need to be driven for up to 10 minutes above 15 mph (24 km/h) in order for the TPMS to receive this information.

Premium System — If Equipped

The TPMS uses wireless technology with wheel rim mounted electronic sensors to monitor tire pressure levels. Sensors, mounted to each wheel as part of the valve stem, transmit tire pressure readings to the receiver module.

NOTE: It is particularly important for you to check the tire pressure in all of your tires regularly and to maintain the proper pressure.

The TPMS consists of the following components:

- Receiver Module
- Four Tire Pressure Monitoring Sensors
- Three Trigger Modules (mounted in three of the four wheel wells)
- Various Tire Pressure Monitoring System Messages, which display in the instrument cluster
- Tire Pressure Monitoring Telltale Light

Tire Pressure Monitoring Low Pressure Warnings

The Tire Pressure Monitoring Telltale Light will illuminate in the instrument cluster and an audible chime will be activated when one or more of the four active road tire pressures are low. The audible chime will sound once every ignition cycle for the first condition that it detects. In addition, the instrument cluster will display a "LOW TIRE" text message for a minimum of five seconds and a graphic of the pressure value(s) with the low tire(s) flashing.

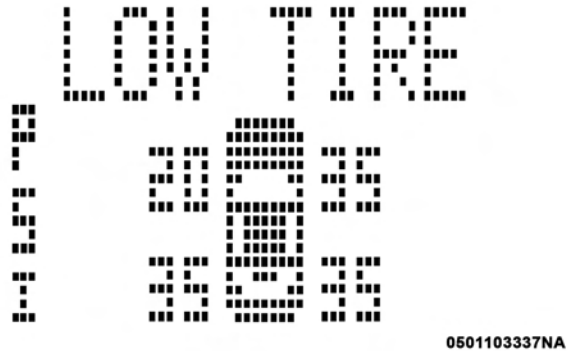

Tire Pressure Monitoring Display

Should a low tire condition occur on any of the four active road tire(s), you should stop as soon as possible and inflate all tires that are flashing on the graphic display to the vehicle's recommended cold placard pressure value. The system will automatically update, the "LOW TIRE" text message will no longer be displayed, the graphic display of the pressure value(s) will stop flashing, and the Tire Pressure Monitoring Light will extinguish once the updated tire pressure(s) have been received.

NOTE: When filling warm tires, the tire pressure may need to be increased up to an additional 4 psi (30 kPa) above the recommended cold placard pressure in order to turn the Tire Pressure Monitoring Telltale Light off.
The vehicle may need to be driven for up to 10 minutes above 15 mph (24 km/h) to receive this information.

Service TPMS Message

The Tire Pressure Monitoring Telltale Light will flash on and off for 75 seconds, and remain on solid when a system fault is detected. The system fault will also sound a chime. The instrument cluster will display a “SERVICE TPM SYSTEM” message for a minimum of five seconds. This text message is then followed by a graphic display, with “--“ in place of the pressure value(s) indicating which Tire Pressure Monitoring Sensor(s) is not being received.

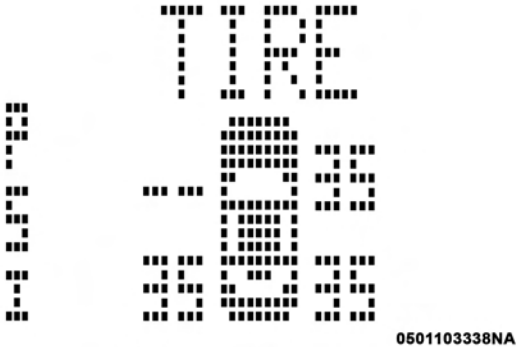

Tire Pressure Monitoring Display

If the ignition key is cycled, this sequence will repeat, providing the system fault still exists. If the system fault no longer exists, the Tire Pressure Monitoring Telltale Light will no longer flash, the ″SERVICE TPM SYSTEM″ text message will not be present, and a pressure value will be displayed instead of dashes. A system fault can occur with any of the following scenarios:

1. Jamming due to electronic devices or driving next to facilities emitting the same radio frequencies as the TPM sensors.

2. Installing some form of aftermarket window tinting that affects radio wave signals.
3. Snow or ice around the wheels or wheel housings.
4. Using tire chains on the vehicle.
5. Using wheels/tires not equipped with TPM sensors.

The instrument cluster will also display a "SERVICE TPM SYSTEM" message for a minimum of five seconds when a system fault related to an incorrect sensor location fault is detected. In this case, the "SERVICE TPM SYSTEM" message is then followed with a graphic display with pressure values still shown. This indicates that the pressure values are still being received from the TPM sensors but they may not be located in the correct vehicle position. The system still needs to be serviced as long as the "SERVICE TPM SYSTEM" message is displayed.

NOTE: Your vehicle is equipped with a compact spare wheel and tire assembly.

1. The compact spare tire does not have a tire pressure monitoring sensor. Therefore, the TPMS will not monitor the tire pressure in the compact spare tire.
2. If you install the compact spare tire in place of a road tire that has a pressure below the low-pressure warning limit, upon the next ignition key cycle, a chime will sound and the Tire Pressure Monitoring Telltale Light will still turn ON due to the low tire. The "LOW TIRE" text message and the graphic with the low tire pressure flashing will be displayed.
3. However, after driving the vehicle for up to 10 minutes above 15 mph (24 km/h), the Tire Pressure Monitoring Telltale Light will flash on and off for 75 seconds and then remain on solid. In addition, the instrument cluster will display a "SERVICE TPM SYSTEM" message for a minimum of five seconds and then display dashes (- -) in place of the pressure values.
4. For each subsequent ignition key cycle, a chime will sound and the Tire Pressure Monitoring Telltale Light will flash on and off for 75 seconds and then remain on solid, and the instrument cluster will display a "SERVICE TPM SYSTEM" message for a minimum of five seconds and then display dashes (- -) in place of the pressure values.
5. Once you repair or replace the original road tire and reinstall it on the vehicle in place of the compact spare tire, the TPMS will update automatically and the Tire Pressure Monitoring Telltale Light will turn OFF, as long as no tire pressure is below the low-pressure warning

limit in any of the four active road tires. The vehicle may need to be driven for up to 10 minutes above 15 mph (24 km/h) in order for the TPMS to receive this information.

General Information

The following regulatory statement applies to all radio frequency (RF) devices equipped in this vehicle:

This device complies with Part 15 of the FCC Rules and with Industry Canada license-exempt RSS standard(s). Operation is subject to the following two conditions:

(1) This device may not cause harmful interference, and

(2) This device must accept any interference received, including interference that may cause undesired operation.

NOTE: Changes or modifications not expressly approved by the party responsible for compliance could void the user's authority to operate the equipment.

OCCUPANT RESTRAINT SYSTEMS

Some of the most important safety features in your vehicle are the restraint systems:

Occupant Restraint Systems Features

- Seat Belt Systems
- Supplemental Restraint Systems (SRS) Air Bags
- Supplemental Active Head Restraints
- Child Restraints

Some of the safety features described in this section may be standard equipment on some models, or may be optional equipment on others. If you are not sure, ask your authorized dealer.

Important Safety Precautions

Please pay close attention to the information in this section. It tells you how to use your restraint system properly, to keep you and your passengers as safe as possible.

Here are some simple steps you can take to minimize the risk of harm from a deploying air bag:

1. Children 12 years old and under should always ride buckled up in a vehicle with a rear seat.
2. If a child from 2 to 12 years old (not in a rear-facing child restraint) must ride in the front passenger seat, move the

seat as far back as possible and use the proper child restraint (refer to "Child Restraints" in this section for further information).

3. Children that are not big enough to wear the vehicle seat belt properly (refer to "Child Restraints" in this section for further information) should be secured in a vehicle with a rear seat in child restraints or belt-positioning booster seats. Older children who do not use child restraints or belt-positioning booster seats should ride properly buckled up in a vehicle with a rear seat.
4. Never allow children to slide the shoulder belt behind them or under their arm.
5. You should read the instructions provided with your child restraint to make sure that you are using it properly.
6. All occupants should always wear their lap and shoulder belts properly.
7. The driver and front passenger seats should be moved back as far as practical to allow the front air bags room to inflate.
8. Do not lean against the door or window. If your vehicle has side air bags, and deployment occurs, the side air bags will inflate forcefully into the space between occupants and the door and occupants could be injured.
9. If the air bag system in this vehicle needs to be modified to accommodate a disabled person, refer to the "Customer Assistance" section for customer service contact information.

WARNING!

- **Never place a rear-facing child restraint in front of an air bag. A deploying passenger front air bag can cause death or serious injury to a child 12 years or younger, including a child in a rear-facing child restraint.**
- **Only use a rear-facing child restraint in a vehicle with a rear seat.**

Seat Belt Systems

Buckle up even though you are an excellent driver, even on short trips. Someone on the road may be a poor driver and could cause a collision that includes you. This can happen far away from home or on your own street.

Research has shown that seat belts save lives, and they can reduce the seriousness of injuries in a collision. Some of the worst injuries happen when people are thrown from the

vehicle. Seat belts reduce the possibility of ejection and the risk of injury caused by striking the inside of the vehicle. Everyone in a motor vehicle should be belted at all times.

Enhanced Seat Belt Use Reminder System (BeltAlert)

Driver And Passenger BeltAlert — If Equipped

BeltAlert is a feature intended to remind the driver and outboard front seat passenger (if equipped with outboard front passenger seat BeltAlert) to buckle their seat belts. The Belt Alert feature is active whenever the ignition switch is in the START or ON/RUN position.

Initial Indication

If the driver is unbuckled when the ignition switch is first in the START or ON/RUN position, a chime will signal for a few seconds. If the driver or outboard front seat passenger (if equipped with outboard front passenger seat BeltAlert) is unbuckled when the ignition switch is first in the START or ON/RUN position the Seat Belt Reminder Light will turn on and remain on until both outboard front seat belts are buckled. The outboard front passenger seat BeltAlert is not active when an outboard front passenger seat is unoccupied.

BeltAlert Warning Sequence

The BeltAlert warning sequence is activated when the vehicle is moving above a specified vehicle speed range and the driver or outboard front seat passenger is unbuckled (if equipped with outboard front passenger seat BeltAlert) (the outboard front passenger seat BeltAlert is not active when the outboard front passenger seat is unoccupied). The BeltAlert warning sequence starts by blinking the Seat Belt Reminder Light and sounding an intermittent chime. Once the BeltAlert warning sequence has completed, the Seat Belt Reminder Light will remain on until the seat belts are buckled. The BeltAlert warning sequence may repeat based on vehicle speed until the driver and occupied outboard front seat passenger seat belts are buckled. The driver should instruct all occupants to buckle their seat belts.

Change Of Status

If the driver or outboard front seat passenger (if equipped with outboard front passenger seat BeltAlert) unbuckles their seat belt while the vehicle is traveling, the BeltAlert warning sequence will begin until the seat belts are buckled again.

The outboard front passenger seat BeltAlert is not active when the outboard front passenger seat is unoccupied. BeltAlert may be triggered when an animal or other items are placed on the outboard front passenger seat or when the seat is folded flat (if equipped). It is recommended that pets be restrained in the rear seat (if equipped) in pet harnesses or pet carriers that are secured by seat belts, and cargo is properly stowed.

BeltAlert can be activated or deactivated by your authorized dealer. FCA US LLC does not recommend deactivating BeltAlert.

NOTE: If BeltAlert has been deactivated and the driver or outboard front seat passenger (if equipped with outboard front passenger seat BeltAlert) is unbuckled the Seat Belt Reminder Light will turn on and remain on until the driver and outboard front seat passenger seat belts are buckled.

Lap/Shoulder Belts

All seating positions in your vehicle are equipped with lap/shoulder belts.

The seat belt webbing retractor will lock only during very sudden stops or collisions. This feature allows the shoulder part of the seat belt to move freely with you under normal conditions. However, in a collision the seat belt will lock and reduce your risk of striking the inside of the vehicle or being thrown out of the vehicle.

WARNING!

- **Relying on the air bags alone could lead to more severe injuries in a collision. The air bags work with your seat belt to restrain you properly. In some collisions, the air bags won't deploy at all. Always wear your seat belt even though you have air bags.**
- **In a collision, you and your passengers can suffer much greater injuries if you are not properly buckled up. You can strike the interior of your vehicle or other passengers, or you can be thrown out of the vehicle. Always be sure you and others in your vehicle are buckled up properly.**
- **It is dangerous to ride in a cargo area, inside or outside of a vehicle. In a collision, people riding in these areas are more likely to be seriously injured or killed.**
- **Do not allow people to ride in any area of your vehicle that is not equipped with seats and seat belts.**
- **Be sure everyone in your vehicle is in a seat and using a seat belt properly. Occupants, including the**

(Continued)

WARNING! *(Continued)*

driver, should always wear their seat belts whether or not an air bag is also provided at their seating position to minimize the risk of severe injury or death in the event of a crash.

- Wearing your seat belt incorrectly could make your injuries in a collision much worse. You might suffer internal injuries, or you could even slide out of the seat belt. Follow these instructions to wear your seat belt safely and to keep your passengers safe, too.
- Two people should never be belted into a single seat belt. People belted together can crash into one another in a collision, hurting one another badly. Never use a lap/shoulder belt or a lap belt for more than one person, no matter what their size.

WARNING!

- A lap belt worn too high can increase the risk of injury in a collision. The seat belt forces won't be at the strong hip and pelvic bones, but across your abdomen. Always wear the lap part of your seat belt as low as possible and keep it snug.

(Continued)

WARNING! *(Continued)*

- A twisted seat belt may not protect you properly. In a collision, it could even cut into you. Be sure the seat belt is flat against your body, without twists. If you can't straighten a seat belt in your vehicle, take it to your authorized dealer immediately and have it fixed.
- A seat belt that is buckled into the wrong buckle will not protect you properly. The lap portion could ride too high on your body, possibly causing internal injuries. Always buckle your seat belt into the buckle nearest you.
- A seat belt that is too loose will not protect you properly. In a sudden stop, you could move too far forward, increasing the possibility of injury. Wear your seat belt snugly.
- A seat belt that is worn under your arm is dangerous. Your body could strike the inside surfaces of the vehicle in a collision, increasing head and neck injury. A seat belt worn under the arm can cause internal injuries. Ribs aren't as strong as shoulder bones. Wear the seat belt over your shoulder so that your strongest bones will take the force in a collision.

(Continued)

WARNING! ***(Continued)***

- **A shoulder belt placed behind you will not protect you from injury during a collision. You are more likely to hit your head in a collision if you do not wear your shoulder belt. The lap and shoulder belt are meant to be used together.**
- **A frayed or torn seat belt could rip apart in a collision and leave you with no protection. Inspect the seat belt system periodically, checking for cuts, frays, or loose parts. Damaged parts must be replaced immediately. Do not disassemble or modify the seat belt system. Seat belt assemblies must be replaced after a collision.**

Lap/Shoulder Belt Operating Instructions

1. Enter the vehicle and close the door. Sit back and adjust the seat.
2. The seat belt latch plate is above the back of the front seat, and next to your arm in the rear seat (for vehicles equipped with a rear seat). Grasp the latch plate and pull out the seat belt. Slide the latch plate up the webbing as far as necessary to allow the seat belt to go around your lap.

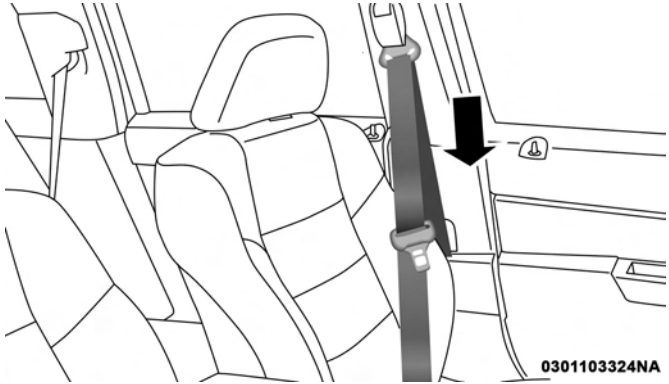

Pulling Out The Latch Plate

3. When the seat belt is long enough to fit, insert the latch plate into the buckle until you hear a “click.”

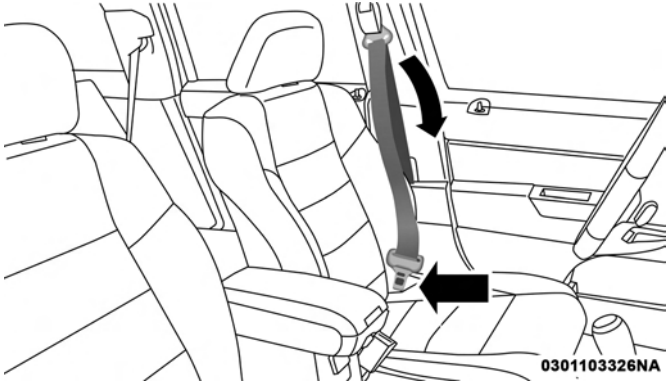

Inserting Latch Plate Into Buckle

4. Position the lap belt so that it is snug and lies low across your hips, below your abdomen. To remove slack in the lap belt portion, pull up on the shoulder belt. To loosen the lap belt if it is too tight, tilt the latch plate and pull on the lap belt. A snug seat belt reduces the risk of sliding under the seat belt in a collision.

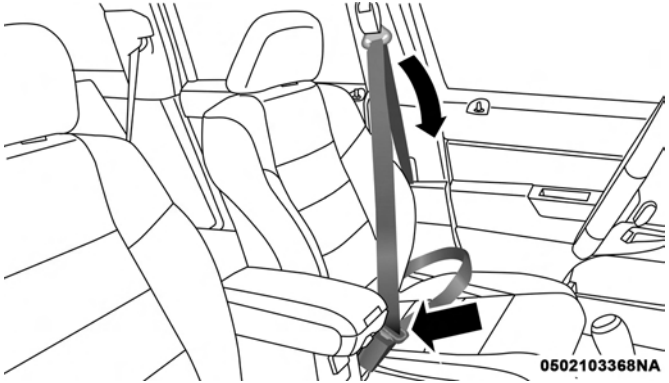

Positioning The Lap Belt

5. Position the shoulder belt across the shoulder and chest with minimal, if any slack so that it is comfortable and not resting on your neck. The retractor will withdraw any slack in the shoulder belt.

6. To release the seat belt, push the red button on the buckle. The seat belt will automatically retract to its stowed position. If necessary, slide the latch plate down the webbing to allow the seat belt to retract fully.

Lap/Shoulder Belt Untwisting Procedure

Use the following procedure to untwist a twisted lap/shoulder belt.

1. Position the latch plate as close as possible to the anchor point.
2. At about 6 to 12 in (15 to 30 cm) above the latch plate, grasp and twist the seat belt webbing 180 degrees to create a fold that begins immediately above the latch plate.
3. Slide the latch plate upward over the folded webbing. The folded webbing must enter the slot at the top of the latch plate.
4. Continue to slide the latch plate up until it clears the folded webbing and the seat belt is no longer twisted.

Adjustable Upper Shoulder Belt Anchorage

In the driver and front passenger seats, the top of the shoulder belt can be adjusted upward or downward to position the seat belt away from your neck. Push or squeeze the anchorage button to release the anchorage, and move it up or down to the position that serves you best.

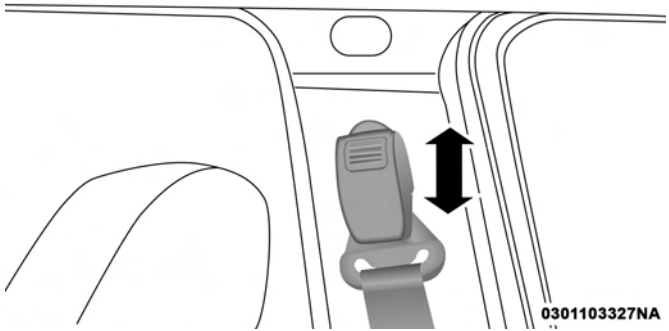

Adjustable Upper Shoulder Belt Anchorage

As a guide, if you are shorter than average, you will prefer the shoulder belt anchorage in a lower position, and if you are taller than average, you will prefer the shoulder belt anchorage in a higher position. After you release the anchorage button, try to move it up or down to make sure that it is locked in position.

NOTE: The adjustable upper shoulder belt anchorage is equipped with an Easy Up feature. This feature allows the shoulder belt anchorage to be adjusted in the upward position without pushing or squeezing the release button. To verify the shoulder belt anchorage is latched, pull downward on the shoulder belt anchorage until it is locked into position.

WARNING!

- **Wearing your seat belt incorrectly could make your injuries in a collision much worse. You might suffer internal injuries, or you could even slide out of the seat belt. Follow these instructions to wear your seat belt safely and to keep your passengers safe, too.**
- **Position the shoulder belt across the shoulder and chest with minimal, if any slack so that it is comfortable and not resting on your neck. The retractor will withdraw any slack in the shoulder belt.**
- **Misadjustment of the seat belt could reduce the effectiveness of the safety belt in a crash.**

Second Row Center Seat Belt Operating Instructions

The second row center seat belt features a seat belt with a mini-latch plate and buckle, which allows the seat belt to detach from the lower anchor when the seat is folded. The mini-latch plate and regular latch plate can then be stored out of the way in the right side trim panel for added convenience to open up utilization of the storage areas behind the front seats when the seat is not occupied.

1. Remove the mini-latch plate and regular latch plate from its stowed position in the right rear side trim panel.

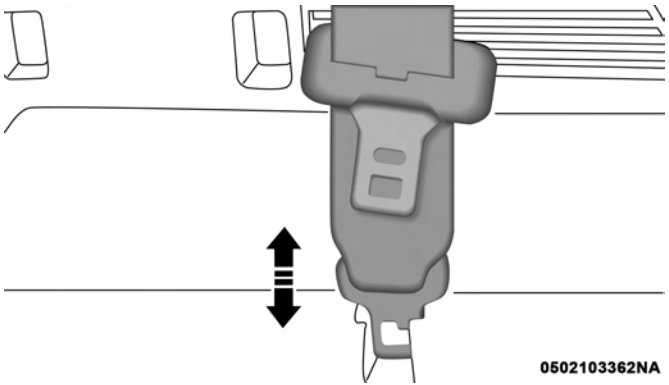

Mini-Latch Stowage

2. Grasp the mini-latch plate and pull the seat belt over the seat.
3. Route the shoulder belt to the inside of the right head restraint.

4. When the seat belt is long enough to fit, insert the mini-latch plate into the mini-buckle until you hear a "click."

5. Sit back in seat. Slide the regular latch plate up the webbing as far as necessary to allow the seat belt to go around your lap.

6. When the seat belt is long enough to fit, insert the latch plate into the buckle until you hear a "click."

7. Position the lap belt so that it is snug and lies low across your hips, below your abdomen. To remove slack in the lap belt portion, pull up on the shoulder belt. To loosen the lap belt if it is too tight, pull on the lap belt. A snug seat belt reduces the risk of sliding under the seat belt in a collision.

8. Position the shoulder belt on your chest so that it is comfortable and not resting on your neck. The retractor will withdraw any slack in the seat belt.

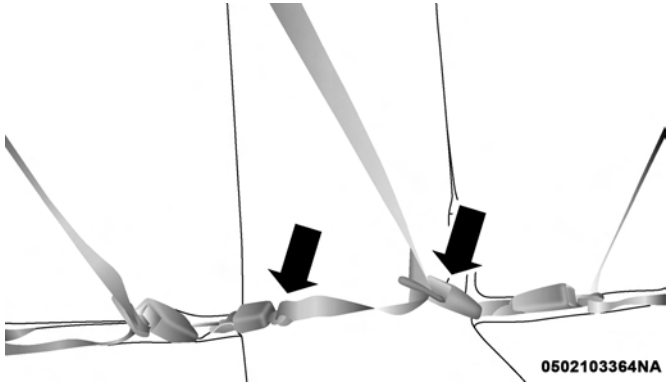

Rear Center Seat Belt Buckled

9. To release the seat belt, push the red button on the buckle.

10. To disengage the mini-latch plate from the mini-buckle for storage, insert the regular latch plate into the black button on the top of the mini-buckle. The seat belt will automatically retract to its stowed position. If necessary, slide the latch plate down the webbing to allow the seat belt to retract fully. Insert the mini-latch plate and regular latch plate into its stowed position.

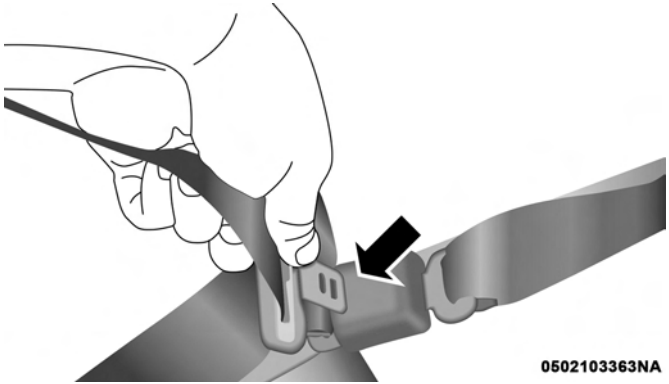

Detaching Mini-Latch And Buckle

WARNING!

- **If the mini-latch plate and mini-buckle are not properly connected when the seat belt is used by an occupant, the seat belt will not be able to provide proper restraint and will increase the risk of injury in a collision.**
- **When reattaching the mini-latch plate and mini-buckle, ensure the seat belt webbing is not twisted. If the webbing is twisted, follow the preceding**

(Continued)

WARNING! *(Continued)*

procedure to detach the mini-latch plate and mini-buckle, untwist the webbing, and reattach the mini-latch plate and mini-buckle.

Seat Belt Extender

If a seat belt is not long enough to fit properly, even when the webbing is fully extended and the adjustable upper shoulder belt anchorage (if equipped) is in its lowest position, your authorized dealer can provide you with a Seat Belt Extender. The Seat Belt Extender should be used only if the existing seat belt is not long enough. When the Seat Belt Extender is not required for a different occupant, it must be removed.

WARNING!

- **ONLY use a Seat Belt Extender if it is physically required in order to properly fit the original seat belt system. DO NOT USE the Seat Belt Extender if, when worn, the distance between the front edge of the Seat Belt Extender buckle and the center of the occupant's body is LESS than 6 inches.**
- **Using a Seat Belt Extender when not needed can increase the risk of serious injury or death in a collision. Only use the Seat Belt Extender when the lap belt is not long enough and only use in the recommended seating positions. Remove and store the Seat Belt Extender when not needed.**

Seat Belts And Pregnant Women

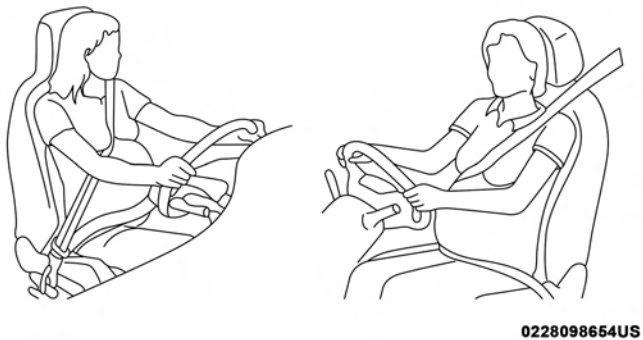

Pregnant Women And Seat Belts

Seat belts must be worn by all occupants including pregnant women: the risk of injury in the event of an accident is reduced for the mother and the unborn child if they are wearing a seat belt.

Position the lap belt snug and low below the abdomen and across the strong bones of the hips. Place the shoulder belt across the chest and away from the neck. Never place the shoulder belt behind the back or under the arm.

Seat Belt Pretensioner

The front seat belt system is equipped with pretensioning devices that are designed to remove slack from the seat belt in the event of a collision. These devices may improve the performance of the seat belt by removing slack from the seat belt early in a collision. Pretensioners work for all size occupants, including those in child restraints.

NOTE: These devices are not a substitute for proper seat belt placement by the occupant. The seat belt still must be worn snugly and positioned properly.

The pretensioners are triggered by the Occupant Restraint Controller (ORC). Like the air bags, the pretensioners are single use items. A deployed pretensioner or a deployed air bag must be replaced immediately.

Energy Management Feature

This vehicle has a seat belt system with an Energy Management feature in the front seating positions that may help further reduce the risk of injury in the event of a collision. The seat belt system has a retractor assembly that is designed to release webbing in a controlled manner.

Switchable Automatic Locking Retractor (ALR)

The seat belts in the passenger seating positions are equipped with a Switchable Automatic Locking Retractor (ALR) which is used to secure a child restraint system. For additional information, refer to “Installing Child Restraints Using The Vehicle Seat Belt” under the “Child Restraints” section of this manual. The figure below illustrates the locking feature for each seating position.

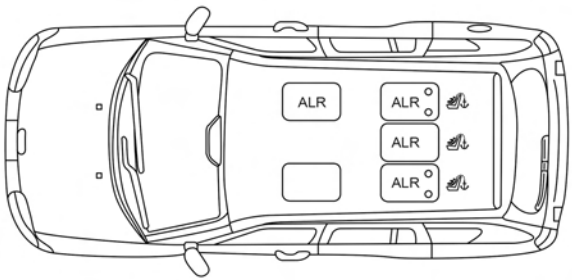

0502108046US

ALR — Switchable Automatic Locking Retractor

If the passenger seating position is equipped with an ALR and is being used for normal usage, only pull the seat belt webbing out far enough to comfortably wrap around the occupant's mid-section so as to not activate the ALR. If the ALR is activated, you will hear a clicking sound as the seat belt retracts. Allow the webbing to retract completely in this case and then carefully pull out only the amount of webbing necessary to comfortably wrap around the occupant's mid-section. Slide the latch plate into the buckle until you hear a "click."

In Automatic Locking Mode, the shoulder belt is automatically pre-locked. The seat belt will still retract to remove any slack in the shoulder belt. Use the Automatic Locking Mode anytime a child restraint is installed in a seating position that has a seat belt with this feature. Children 12 years old and under should always be properly restrained in a vehicle with a rear seat.

WARNING!

- **Never place a rear-facing child restraint in front of an air bag. A deploying passenger front air bag can cause death or serious injury to a child 12 years or younger, including a child in a rear-facing child restraint.**

(Continued)

WARNING! ***(Continued)***

- **Only use a rear-facing child restraint in a vehicle with a rear seat.**

How To Engage The Automatic Locking Mode

1. Buckle the combination lap and shoulder belt.
2. Grasp the shoulder portion and pull downward until the entire seat belt is extracted.
3. Allow the seat belt to retract. As the seat belt retracts, you will hear a clicking sound. This indicates the seat belt is now in the Automatic Locking Mode.

How To Disengage The Automatic Locking Mode

Unbuckle the combination lap/shoulder belt and allow it to retract completely to disengage the Automatic Locking Mode and activate the vehicle sensitive (emergency) locking mode.

WARNING!

- **The seat belt assembly must be replaced if the switchable Automatic Locking Retractor (ALR) feature or any other seat belt function is not working properly when checked according to the procedures in the Service Manual.**
- **Failure to replace the seat belt assembly could increase the risk of injury in collisions.**
- **Do not use the Automatic Locking Mode to restrain occupants who are wearing the seat belt or children who are using booster seats. The locked mode is only used to install rear-facing or forward-facing child restraints that have a harness for restraining the child.**

Supplemental Active Head Restraints (AHR)

These head restraints are passive, deployable components, and vehicles with this equipment cannot be readily identified by any markings, only through visual inspection of the head restraint. The head restraint will be split in two halves, with the front half being soft foam and trim, the back half being decorative plastic.

How The Active Head Restraints (AHR) Work

The Occupant Restraint Controller (ORC) determines whether the severity or type of rear impact will require the Active Head Restraints (AHR) to deploy. If a rear impact requires deployment, both the driver and front passenger seat AHRs will be deployed.

When AHRs deploy during a rear impact, the front half of the head restraint extends forward to minimize the gap between the back of the occupant's head and the AHR. This system is designed to help prevent or reduce the extent of injuries to the driver and front passenger in certain types of rear impacts.

NOTE: The Active Head Restraints (AHR) may or may not deploy in the event of a front or side impact. However, if during a front impact, a secondary rear impact occurs, the AHR may deploy based on the severity and type of the impact.

Active Head Restraint (AHR) Components:

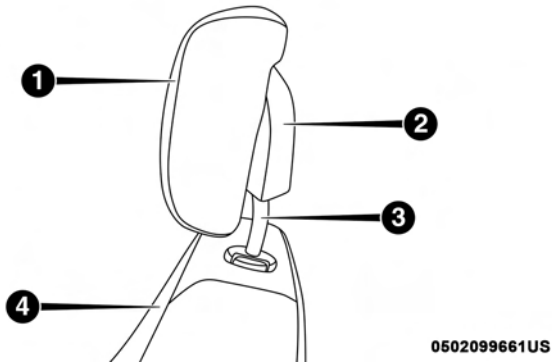

Active Head Restraint (AHR) Components

1 — Head Restraint Front Half (Soft Foam And Trim)
2 — Head Restraint Back Half (Decorative Plastic Rear Cover)
3 — Head Restraint Guide Tubes
4 — Seatback

WARNING!

- **All occupants, including the driver, should not operate a vehicle or sit in a vehicle's seat until the head**

(Continued)

WARNING! *(Continued)*

restraints are placed in their proper positions in order to minimize the risk of neck injury in the event of a collision.
- **Do not place items over the top of the Active Head Restraint, such as coats, seat covers or portable DVD players. These items may interfere with the operation of the Active Head Restraint in the event of a collision and could result in serious injury or death.**
- **Active Head Restraints may be deployed if they are struck by an object such as a hand, foot or loose cargo. To avoid accidental deployment of the Active Head Restraint ensure that all cargo is secured, as loose cargo could contact the Active Head Restraint during sudden stops. Failure to follow this warning could cause personal injury if the Active Head Restraint is deployed.**

NOTE: For more information on properly adjusting and positioning the head restraint, refer to "Supplemental Active Head Restraints — Front Seats" in "Getting To Know Your Vehicle."

Resetting Active Head Restraints (AHR)

If the Active Head Restraints are triggered during a collision, the front half of the head restraint will be extended forward and separated from the rear half of the head restraint (See Image). Do not drive your vehicle after the AHRs have deployed. The head restraint must be reset into the original position to best protect the occupant for all types of collisions. An authorized FCA US LLC dealer must reset the AHRs on the driver's and front passenger's seat before driving. Personally attempting to reset the AHRs may result in damage to the AHRs that could impair their function.

Active Head Restraint (AHR) Triggered

WARNING!

Deployed AHRs are not able to best protect you in all types of collisions. Have deployed AHRs reset by an authorized dealer immediately.

Supplemental Restraint Systems (SRS)

Some of the safety features described in this section may be standard equipment on some models, or may be optional equipment on others. If you are not sure, ask your authorized dealer.

The air bag system must be ready to protect you in a collision. The Occupant Restraint Controller (ORC) monitors the internal circuits and interconnecting wiring associated with the electrical Air Bag System Components. Your vehicle may be equipped with the following Air Bag System Components:

Air Bag System Components

- Occupant Restraint Controller (ORC)
- Air Bag Warning Light
- Steering Wheel and Column
- Instrument Panel

- Knee Impact Bolsters
- Driver and Front Passenger Air Bags
- Supplemental Side Air Bags
- Front and Side Impact Sensors
- Seat Belt Pretensioners
- Seat Track Position Sensors
- Seat Belt Buckle Switch

Air Bag Warning Light

The ORC monitors the readiness of the electronic parts of the air bag system whenever the ignition switch is in the START or ON/RUN position. If the ignition switch is in the OFF position or in the ACC position, the air bag system is not on and the air bags will not inflate.

The ORC contains a backup power supply system that may deploy the air bag system even if the battery loses power or it becomes disconnected prior to deployment.

The ORC turns on the Air Bag Warning Light in the instrument panel for approximately four to eight seconds for a self-check when the ignition switch is first in the ON/RUN position. After the self-check, the Air Bag Warning Light will turn off. If the ORC detects a malfunction in any part of the system, it turns on the Air Bag Warning Light, either momentarily or continuously. A single chime will sound to alert you if the light comes on again after initial startup.

The ORC also includes diagnostics that will illuminate the instrument panel Air Bag Warning Light if a malfunction is detected that could affect the air bag system. The diagnostics also record the nature of the malfunction. While the air bag system is designed to be maintenance free, if any of the following occurs, have an authorized dealer service the air bag system immediately.

- The Air Bag Warning Light does not come on during the four to eight seconds when the ignition switch is first in the ON/RUN position.
- The Air Bag Warning Light remains on after the four to eight-second interval.
- The Air Bag Warning Light comes on intermittently or remains on while driving.

NOTE: If the speedometer, tachometer, or any engine related gauges are not working, the Occupant Restraint Controller (ORC) may also be disabled. In this condition the air bags may not be ready to inflate for your protection. Have an authorized dealer service the air bag system immediately.

WARNING!

Ignoring the Air Bag Warning Light in your instrument panel could mean you won't have the air bag system to protect you in a collision. If the light does not come on as a bulb check when the ignition is first turned on, stays on after you start the vehicle, or if it comes on as you drive, have an authorized dealer service the air bag system immediately.

Front Air Bags

This vehicle has front air bags and lap/shoulder belts for both the driver and front passenger. The front air bags are a supplement to the seat belt restraint systems. The driver front air bag is mounted in the center of the steering wheel. The passenger front air bag is mounted in the instrument panel, above the glove compartment. The words "SRS AIRBAG" or "AIRBAG" are embossed on the air bag covers.

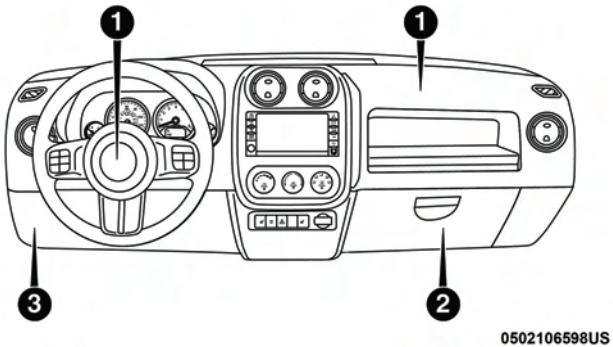

Front Air Bag And Knee Impact Bolster Locations

1 — Driver And Passenger Front Air Bags
2 — Passenger Knee Impact Bolster
3 — Driver Knee Impact Bolster

WARNING!

- **Being too close to the steering wheel or instrument panel during front air bag deployment could cause serious injury, including death. Air bags need room to inflate. Sit back, comfortably extending your arms to reach the steering wheel or instrument panel.**

(Continued)

WARNING! *(Continued)*

- **Never place a rear-facing child restraint in front of an air bag. A deploying passenger front air bag can cause death or serious injury to a child 12 years or younger, including a child in a rear-facing child restraint.**
- **Only use a rear-facing child restraint in a vehicle with a rear seat.**

Driver And Passenger Front Air Bag Features

The Advanced Front Air Bag system has multistage driver and front passenger air bags. This system provides output appropriate to the severity and type of collision as determined by the Occupant Restraint Controller (ORC), which may receive information from the front impact sensors (if equipped) or other system components.

The first stage inflator is triggered immediately during an impact that requires air bag deployment. A low energy output is used in less severe collisions. A higher energy output is used for more severe collisions.

This vehicle may be equipped with a driver and/or front passenger seat belt buckle switch that detects whether the driver or front passenger seat belt is buckled. The seat belt buckle switch may adjust the inflation rate of the Advanced Front Air Bags.

This vehicle may be equipped with driver and/or front passenger seat track position sensors that may adjust the inflation rate of the Advanced Front Air Bags based upon seat position.

WARNING!

- **No objects should be placed over or near the air bag on the instrument panel or steering wheel because any such objects could cause harm if the vehicle is in a collision severe enough to cause the air bag to inflate.**
- **Do not put anything on or around the air bag covers or attempt to open them manually. You may damage the air bags and you could be injured because the air bags may no longer be functional. The protective covers for the air bag cushions are designed to open only when the air bags are inflating.**
- **Relying on the air bags alone could lead to more severe injuries in a collision. The air bags work with your seat belt to restrain you properly. In some**

(Continued)

WARNING! *(Continued)*

collisions, air bags won't deploy at all. Always wear your seat belts even though you have air bags.

Front Air Bag Operation

Front Air Bags are designed to provide additional protection by supplementing the seat belts. Front air bags are not expected to reduce the risk of injury in rear, side, or rollover collisions. The front air bags will not deploy in all frontal collisions, including some that may produce substantial vehicle damage — for example, some pole collisions, truck underrides, and angle offset collisions.

On the other hand, depending on the type and location of impact, front air bags may deploy in crashes with little vehicle front-end damage but that produce a severe initial deceleration.

Because air bag sensors measure vehicle deceleration over time, vehicle speed and damage by themselves are not good indicators of whether or not an air bag should have deployed.

Seat belts are necessary for your protection in all collisions, and also are needed to help keep you in position, away from an inflating air bag.

When the ORC detects a collision requiring the front air bags, it signals the inflator units. A large quantity of non-toxic gas is generated to inflate the front air bags.

The steering wheel hub trim cover and the upper right side of the instrument panel separate and fold out of the way as the air bags inflate to their full size. The front air bags fully inflate in less time than it takes to blink your eyes. The front air bags then quickly deflate while helping to restrain the driver and front passenger.

Knee Impact Bolsters

The Knee Impact Bolsters help protect the knees of the driver and front passenger, and position the front occupants for improved interaction with the front air bags.

WARNING!

- **Do not drill, cut, or tamper with the knee impact bolsters in any way.**
- **Do not mount any accessories to the knee impact bolsters such as alarm lights, stereos, citizen band radios, etc.**

Supplemental Side Air Bags

Your vehicle is equipped with two types of side air bags:

1. **Supplemental Seat-Mounted Side Air Bags (SABs): Located in the outboard side of the front seats. The SABs are marked with a "SRS AIRBAG" or "AIRBAG" label sewn into the outboard side of the seats.**

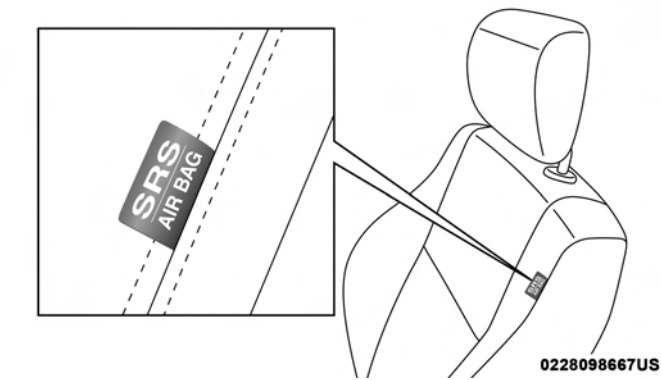

Supplemental Seat-Mounted Side Air Bag Label

The SABs may help to reduce the risk of occupant injury during certain side impacts and/or vehicle rollover events, in addition to the injury reduction potential provided by the seat belts and body structure.

When the SAB deploys, it opens the seam on the outboard side of the seatback's trim cover. The inflating SAB deploys through the seat seam into the space between the occupant and the door. The SAB moves at a very high speed and with such a high force that it could injure occupants if they are not seated properly, or if items are positioned in the area where the SAB inflates. Children are at an even greater risk of injury from a deploying air bag.

WARNING!

Do not use accessory seat covers or place objects between you and the Side Air Bags; the performance could be adversely affected and/or objects could be pushed into you, causing serious injury.

2. **Supplemental Side Air Bag Inflatable Curtains (SABICs): Located above the side windows. The trim covering the SABICs is labeled "SRS AIRBAG" or "AIRBAG."**

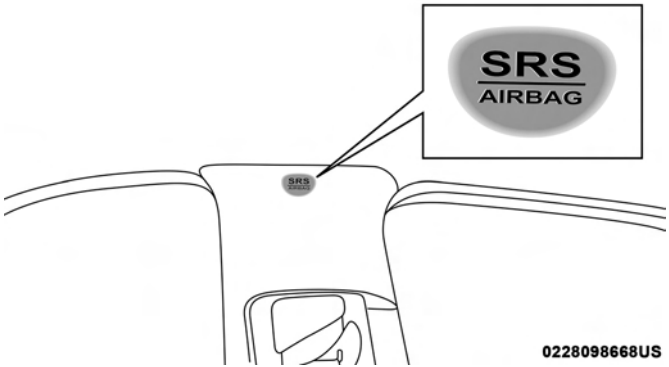

Supplemental Side Air Bag Inflatable Curtain (SABIC) Label Location

SABICs may help reduce the risk of head or other injuries to front and rear seat outboard occupants in certain side impacts and/or vehicle rollover events, in addition to the injury reduction potential provided by the seat belts and body structure.

The SABICs deploy downward, covering the side windows. An inflating SABIC pushes the outside edge of the trim out of the way and covers the window. The SABICs inflate with enough force to injure occupants if they are not belted and seated properly, or if items are positioned in the area where the SABICs inflate. Children are at an even greater risk of injury from a deploying air bag.

WARNING!

- **Do not stack luggage or other cargo up high enough to block the deployment of the SABICs. The trim covering above the side windows where the SABIC and its deployment path are located should remain free from any obstructions.**
- **In order for the SABICs to work as intended, do not install any accessory items in your vehicle which could alter the roof. Do not add an aftermarket sunroof to your vehicle. Do not add roof racks that require permanent attachments (bolts or screws) for installation on the vehicle roof. Do not drill into the roof of the vehicle for any reason.**

The SABICs and SABs (Side Air Bags) are designed to activate in certain side impacts and certain rollover events. The Occupant Restraint Controller (ORC) determines whether the deployment of the Side Air Bags in a particular side impact or rollover event is appropriate, based on the severity and type of collision. Vehicle damage by itself is not a good indicator of whether or not Side Air Bags should have deployed.

Side Air Bags are a supplement to the seat belt restraint system. Side Air Bags deploy in less time than it takes to blink your eyes.

WARNING!

- **Occupants, including children, who are up against or very close to Side Air Bags can be seriously injured or killed. Occupants, including children, should never lean on or sleep against the door, side windows, or area where the side air bags inflate, even if they are in an infant or child restraint.**
- **Seat belts (and child restraints where appropriate) are necessary for your protection in all collisions. They also help keep you in position, away from an inflating Side Air Bag. To get the best protection from the Side Air Bags, occupants must wear their seat belts properly and sit upright with their backs against the seats. Children must be properly restrained in a child restraint or booster seat that is appropriate for the size of the child.**
- **Side Air Bags need room to inflate. Do not lean against the door or window. Sit upright in the center of the seat.**

(Continued)

WARNING! ***(Continued)***

- **Being too close to the Side Air Bags during deployment could cause you to be severely injured or killed.**
- **Relying on the Side Air Bags alone could lead to more severe injuries in a collision. The Side Air Bags work with your seat belt to restrain you properly. In some collisions, Side Air Bags won't deploy at all. Always wear your seat belt even though you have Side Air Bags.**

NOTE: Air bag covers may not be obvious in the interior trim, but they will open during air bag deployment.

Side Impacts

In side impacts, the side impact sensors aid the ORC in determining the appropriate response to impact events. The system is calibrated to deploy the Side Air Bags on the impact side of the vehicle during impacts that require Side Air Bag occupant protection. In side impacts, the Side Air Bags deploy independently; a left side impact deploys the left Side Air Bags only and a right side impact deploys the right Side Air Bags only.

The Side Air Bags will not deploy in all side collisions, including some collisions at certain angles, or some side collisions that do not impact the area of the passenger compartment. The Side Air Bags may deploy during angled or offset frontal collisions where the front air bags deploy.

Rollover Events

Side Air Bags are designed to activate in certain rollover events. The ORC determines whether the deployment of the Side Air Bags in a particular rollover event is appropriate, based on the severity and type of collision. Vehicle damage by itself is not a good indicator of whether or not Side Air Bags should have deployed.

The Side Air Bags will not deploy in all rollover events. The rollover sensing-system determines if a rollover event may be in progress and whether deployment is appropriate. A slower-developing event may deploy the seat belt pretensioners on both sides of the vehicle. A faster-developing event may deploy the seat belt pretensioners as well as the Side Air Bags on both sides of the vehicle. The rollover sensing-system may also deploy the seat belt pretensioners, with or without the Side Air Bags, on both sides of the vehicle if the vehicle experiences a near rollover event.

The SABICs may help reduce the risk of partial or complete ejection of vehicle occupants through side windows in certain rollover or side impact events.

The Occupant Restraint Controller (ORC) monitors the internal circuits and interconnecting wiring associated with electrical Air Bag System Components listed below:

Air Bag System Components

- Occupant Restraint Controller (ORC)
- Air Bag Warning Light
- Steering Wheel and Column
- Instrument Panel
- Knee Impact Bolsters
- Driver and Front Passenger Air Bags
- Supplemental Side Air Bags
- Front and Side Impact Sensors
- Seat Belt Pretensioners
- Seat Track Position Sensors
- Seat Belt Buckle Switch

If A Deployment Occurs

The front air bags are designed to deflate immediately after deployment.

NOTE: Front and/or side air bags will not deploy in all collisions. This does not mean something is wrong with the air bag system.

If you do have a collision which deploys the air bags, any or all of the following may occur:

- The air bag material may sometimes cause abrasions and/or skin reddening to the occupants as the air bags deploy and unfold. The abrasions are similar to friction rope burns or those you might get sliding along a carpet or gymnasium floor. They are not caused by contact with chemicals. They are not permanent and normally heal quickly. However, if you haven't healed significantly within a few days, or if you have any blistering, see your doctor immediately.
- As the air bags deflate, you may see some smoke-like particles. The particles are a normal by-product of the process that generates the non-toxic gas used for air bag inflation. These airborne particles may irritate the skin, eyes, nose, or throat. If you have skin or eye irritation, rinse the area with cool water. For nose or throat irritation, move to fresh air. If the irritation continues, see your doctor. If these particles settle on your clothing, follow the garment manufacturer's instructions for cleaning.

Do not drive your vehicle after the air bags have deployed. If you are involved in another collision, the air bags will not be in place to protect you.

WARNING!

Deployed air bags and seat belt pretensioners cannot protect you in another collision. Have the air bags, seat belt pretensioners, and the seat belt retractor assemblies replaced by an authorized dealer immediately. Also, have the Occupant Restraint Controller System serviced as well.

NOTE:

- Air bag covers may not be obvious in the interior trim, but they will open during air bag deployment.
- After any collision, the vehicle should be taken to an authorized dealer immediately.

Enhanced Accident Response System

In the event of an impact, if the communication network remains intact, and the power remains intact, depending on the nature of the event, the ORC will determine whether to have the Enhanced Accident Response System perform the following functions:

- Cut off fuel to the engine.
- Flash hazard lights as long as the battery has power or until the hazard light button is pressed. The hazard lights can be deactivated by pressing the hazard light button.
- Turn on the interior lights, which remain on as long as the battery has power.
- Unlock the power door locks.

Enhanced Accident Response System Reset Procedure

In order to reset the Enhanced Accident Response System functions after an event, the ignition switch must be changed from ignition START or ON/RUN to ignition OFF. Carefully check the vehicle for fuel leaks in the engine compartment and on the ground near the engine compartment and fuel tank before resetting the system and starting the engine.

Maintaining Your Air Bag System

WARNING!

- **Modifications to any part of the air bag system could cause it to fail when you need it. You could be injured if the air bag system is not there to protect you. Do not modify the components or wiring, including adding any kind of badges or stickers to the steering wheel hub trim cover or the upper right side of the instrument panel. Do not modify the front bumper, vehicle body structure, or add aftermarket side steps or running boards.**
- **It is dangerous to try to repair any part of the air bag system yourself. Be sure to tell anyone who works on your vehicle that it has an air bag system.**
- **Do not attempt to modify any part of your air bag system. The air bag may inflate accidentally or may not function properly if modifications are made. Take your vehicle to an authorized dealer for any air bag system service. If your seat, including your trim cover and cushion, needs to be serviced in any way (including removal or loosening/tightening of seat attachment bolts), take the vehicle to your authorized**

(Continued)

WARNING! *(Continued)*

dealer. Only manufacturer approved seat accessories may be used. If it is necessary to modify the air bag system for persons with disabilities, contact your authorized dealer.

Event Data Recorder (EDR)

This vehicle is equipped with an event data recorder (EDR). The main purpose of an EDR is to record, in certain crash or near crash-like situations, such as an air bag deployment or hitting a road obstacle, data that will assist in understanding how a vehicle's systems performed. The EDR is designed to record data related to vehicle dynamics and safety systems for a short period of time, typically 30 seconds or less. The EDR in this vehicle is designed to record such data as:

- How various systems in your vehicle were operating;
- Whether or not the driver and passenger safety belts were buckled/fastened;
- How far (if at all) the driver was depressing the accelerator and/or brake pedal; and,
- How fast the vehicle was traveling.
- These data can help provide a better understanding of the circumstances in which crashes and injuries occur.

NOTE: EDR data are recorded by your vehicle only if a non-trivial crash situation occurs; no data are recorded by the EDR under normal driving conditions and no personal data (e.g., name, gender, age, and crash location) are recorded. However, other parties, such as law enforcement, could combine the EDR data with the type of personally identifying data routinely acquired during a crash investigation.

To read data recorded by an EDR, special equipment is required, and access to the vehicle or the EDR is needed. In addition to the vehicle manufacturer, other parties, such as law enforcement, that have the special equipment, can read the information if they have access to the vehicle or the EDR.

Child Restraints

Everyone in your vehicle needs to be buckled up at all times, including babies and children. Every state in the United States, and every Canadian province, requires that small children ride in proper restraint systems. This is the law, and you can be prosecuted for ignoring it.

Children 12 years or younger should ride properly buckled up in a rear seat, if available. According to crash statistics, children are safer when properly restrained in the rear seats rather than in the front.

WARNING!

In a collision, an unrestrained child can become a projectile inside the vehicle. The force required to hold even an infant on your lap could become so great that you could not hold the child, no matter how strong you are. The child and others could be badly injured. Any child riding in your vehicle should be in a proper restraint for the child's size.

There are different sizes and types of restraints for children from newborn size to the child almost large enough for an adult safety belt. Always check the child seat Owner's Manual to make sure you have the correct seat for your child. Carefully read and follow all the instructions and warnings in the child restraint Owner's Manual and on all the labels attached to the child restraint.

Before buying any restraint system, make sure that it has a label certifying that it meets all applicable Safety Standards. You should also make sure that you can install it in the vehicle where you will use it.

NOTE:

- For additional information, refer to www.safercar.gov/parents/index.htm or call: 1–888–327–4236
- Canadian residents should refer to Transport Canada's website for additional information: http://www.tc.gc.ca/eng/motorvehiclesafety/safedrivers-childsafety-index-53.htm

Summary Of Recommendations For Restraining Children In Vehicles

	Child Size, Height, Weight Or Age	Recommended Type Of Child Restraint
Infants and Toddlers	Children who are two years old or younger and who have not reached the height or weight limits of their child restraint	Either an Infant Carrier or a Convertible Child Restraint, facing rearward in the rear seat of the vehicle
Small Children	Children who are at least two years old or who have out-grown the height or weight limit of their rear-facing child restraint	Forward-Facing Child Restraint with a five-point Harness, facing forward in the rear seat of the vehicle
Larger Children	Children who have out-grown their forward-facing child restraint, but are too small to properly fit the vehicle's seat belt	Belt Positioning Booster Seat and the vehicle seat belt, seated in the rear seat of the vehicle
Children Too Large for Child Restraints	Children 12 years old or younger, who have out-grown the height or weight limit of their booster seat	Vehicle Seat Belt, seated in the rear seat of the vehicle

Infant And Child Restraints

Safety experts recommend that children ride rear-facing in the vehicle until they are two years old or until they reach either the height or weight limit of their rear-facing child restraint. Two types of child restraints can be used rear-facing: infant carriers and convertible child seats.

The infant carrier is only used rear-facing in the vehicle. It is recommended for children from birth until they reach the weight or height limit of the infant carrier. Convertible

child seats can be used either rear-facing or forward-facing in the vehicle. Convertible child seats often have a higher weight limit in the rear-facing direction than infant carriers do, so they can be used rear-facing by children who have outgrown their infant carrier but are still less than at least two years old. Children should remain rear-facing until they reach the highest weight or height allowed by their convertible child seat.

WARNING!

- **Never place a rear-facing child restraint in front of an air bag. A deploying passenger front air bag can cause death or serious injury to a child 12 years or younger, including a child in a rear-facing child restraint.**
- **Only use a rear-facing child restraint in a vehicle with a rear seat.**

Older Children And Child Restraints

Children who are two years old or who have outgrown their rear-facing convertible child seat can ride forward-facing in the vehicle. Forward-facing child seats and convertible child seats used in the forward-facing direction are for children who are over two years old or who have outgrown the rear-facing weight or height limit of their rear-facing convertible child seat. Children should remain in a forward-facing child seat with a harness for as long as possible, up to the highest weight or height allowed by the child seat.

All children whose weight or height is above the forward-facing limit for the child seat should use a belt-positioning booster seat until the vehicle's seat belts fit properly. If the child cannot sit with knees bent over the vehicle's seat cushion while the child's back is against the seatback, they should use a belt-positioning booster seat. The child and belt-positioning booster seat are held in the vehicle by the seat belt.

WARNING!

- **Improper installation can lead to failure of an infant or child restraint. It could come loose in a collision. The child could be badly injured or killed. Follow the child restraint manufacturer's directions exactly when installing an infant or child restraint.**
- **After a child restraint is installed in the vehicle, do not move the vehicle seat forward or rearward because it can loosen the child restraint attachments.**

(Continued)

WARNING! *(Continued)*

Remove the child restraint before adjusting the vehicle seat position. When the vehicle seat has been adjusted, reinstall the child restraint.

- **When your child restraint is not in use, secure it in the vehicle with the seat belt or LATCH anchorages, or remove it from the vehicle. Do not leave it loose in the vehicle. In a sudden stop or accident, it could strike the occupants or seatbacks and cause serious personal injury.**

Children Too Large For Booster Seats

Children who are large enough to wear the shoulder belt comfortably, and whose legs are long enough to bend over the front of the seat when their back is against the seatback, should use the seat belt in a rear seat. Use this simple 5-step test to decide whether the child can use the vehicle's seat belt alone:

1. Can the child sit all the way back against the back of the vehicle seat?
2. Do the child's knees bend comfortably over the front of the vehicle seat – while they are still sitting all the way back?
3. Does the shoulder belt cross the child's shoulder between their neck and arm?
4. Is the lap part of the belt as low as possible, touching the child's thighs and not their stomach?
5. Can the child stay seated like this for the whole trip?

If the answer to any of these questions was "no," then the child still needs to use a booster seat in this vehicle. If the child is using the lap/shoulder belt, check seat belt fit periodically and make sure the seat belt buckle is latched. A child's squirming or slouching can move the belt out of position. If the shoulder belt contacts the face or neck, move the child closer to the center of the vehicle, or use a booster seat to position the seat belt on the child correctly.

WARNING!

Never allow a child to put the shoulder belt under an arm or behind their back. In a crash, the shoulder belt will not protect a child properly, which may result in serious injury or death. A child must always wear both the lap and shoulder portions of the seat belt correctly.

Recommendations For Attaching Child Restraints

Restraint Type	Combined Weight of the Child + Child Restraint	Use any attachment method shown with an "X" Below			
		LATCH – Lower Anchors Only	Seat Belt Only	LATCH – Lower Anchors + Top Tether Anchor	Seat Belt + Top Tether Anchor
Rear-Facing Child Restraint	Up to 65 lbs (29.5 kg)	X	X		
Rear-Facing Child Restraint	More than 65 lbs (29.5 kg)		X		
Forward-Facing Child Restraint	Up to 65 lbs (29.5 kg)			X	X
Forward-Facing Child Restraint	More than 65 lbs (29.5 kg)				X

Lower Anchors And Tethers For CHildren (LATCH) Restraint System

LATCH Label

Your vehicle is equipped with the child restraint anchorage system called LATCH, which stands for Lower Anchors and Tethers for CHildren. The LATCH system has three vehicle anchor points for installing LATCH-equipped child seats. There are two lower anchorages located at the back of the seat cushion where it meets the seatback and one top tether anchorage located behind the seating position. These anchorages are used to install LATCH-equipped child seats without using the vehicle's seat belts. Some seating positions may have a top tether anchorage but no lower anchorages. In these seating positions, the seat belt must be used with the top tether anchorage to install the child restraint. Please see the following table for more information.

Latch Positions For Installing Child Restraints In This Vehicle

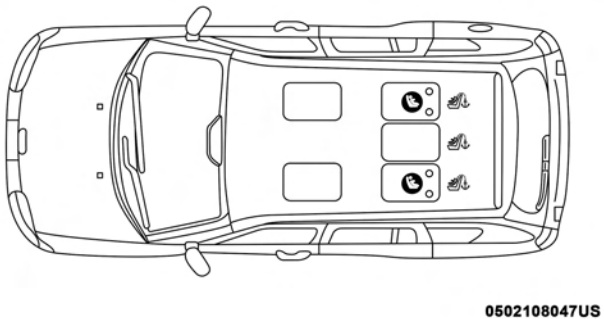

LATCH Positions

- Lower Anchorage Symbol (2 Anchorages Per Seating Position)
- Top Tether Anchorage Symbol

Frequently Asked Questions About Installing Child Restraints With LATCH		
What is the weight limit (child's weight + weight of the child restraint) for using the LATCH anchorage system to attach the child restraint?	65 lbs (29.5 kg)	Use the LATCH anchorage system until the combined weight of the child and the child restraint is 65 lbs (29.5 kg). Use the seat belt and tether anchor instead of the LATCH system once the combined weight is more than 65 lbs (29.5 kg).
Can the LATCH anchorages and the seat belt be used together to attach a rear-facing or forward-facing child restraint?	No	Do not use the seat belt when you use the LATCH anchorage system to attach a rear-facing or forward-facing child restraint.
Can a child seat be installed in the center position using the inner LATCH lower anchorages?	Yes	You can install child restraints with flexible lower anchors in the center position. The inner anchorages are 15.5 inches (390 mm) apart. Do not install child restraints with rigid lower anchors in the center position.

Frequently Asked Questions About Installing Child Restraints With LATCH		
Can two child restraints be attached using a common lower LATCH anchorage?	No	Never “share” a LATCH anchorage with two or more child restraints. If the center position does not have dedicated LATCH lower anchorages, use the seat belt to install a child seat in the center position next to a child seat using the LATCH anchorages in an outboard position.
Can the rear-facing child restraint touch the back of the front passenger seat?	Yes	The child seat may touch the back of the front passenger seat if the child restraint manufacturer also allows contact. See your child restraint owner’s manual for more information.
Can the head restraints be removed?	No	

Locating The LATCH Anchorages

The lower anchorages are round bars that are found at the rear of the seat cushion where it meets the seatback. They are just visible when you lean into the rear seat to install the child restraint. You will easily feel them if you run your finger along the gap between the seatback and seat cushion.

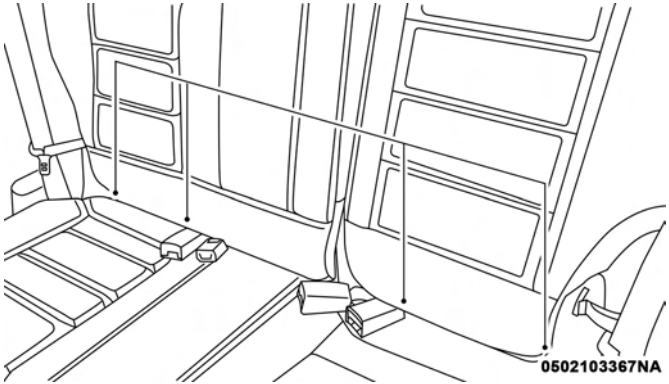

Lower LATCH Anchors

Locating The Upper Tether Anchorages

There are tether strap anchorages behind each rear seating position located on the back of the seat.

LATCH-compatible child restraint systems will be equipped with a rigid bar or a flexible strap on each side. Each will have a hook or connector to attach to the lower anchorage and a way to tighten the connection to the anchorage. Forward-facing child restraints and some rear-facing child restraints will also be equipped with a tether strap. The tether strap will have a hook at the end to attach to the top tether anchorage and a way to tighten the strap after it is attached to the anchorage.

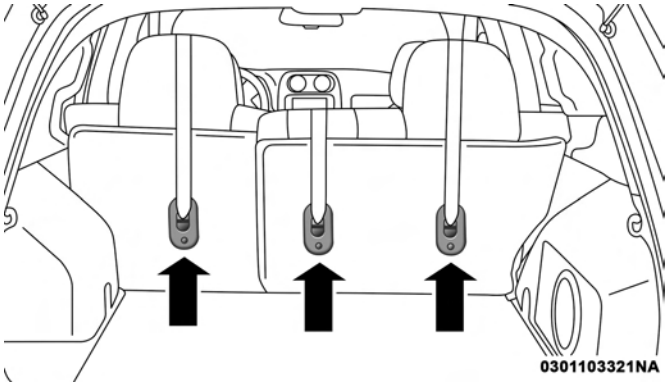

Rear Seat Tether Anchors

Center Seat LATCH: Four Door

Do not install child restraints with rigid lower attachments in the center seating position. Only install this type of child restraint in the outboard seating positions. Child restraints with flexible, webbing mounted lower attachments can be installed in any rear seating position.

WARNING!

Never use the same lower anchorage to attach more than one child restraint. If you are installing LATCH-compatible child restraints next to each other, you must use the seat belt for the center position. You can then use either the LATCH anchors or the vehicle's seat belt for installing child seats in the outboard positions. Please refer to "Installing The LATCH-Compatible Child Restraint System" for typical installation instructions.

Always follow the directions of the child restraint manufacturer when installing your child restraint. Not all child restraint systems will be installed as described here.

To Install A LATCH-Compatible Child Restraint

If the selected seating position has a Switchable Automatic Locking Retractor (ALR) seat belt, stow the seat belt, following the instructions below. See the section "Installing Child Restraints Using The Vehicle Seat Belt" to check what type of seat belt each seating position has.

1. Loosen the adjusters on the lower straps and on the tether strap of the child seat so that you can more easily attach the hooks or connectors to the vehicle anchorages.
2. Place the child seat between the lower anchorages for that seating position. For some second row seats, you may need to recline the seat and / or raise the head restraint to get a better fit. If the rear seat can be moved forward and rearward in the vehicle, you may wish to move it to its rear-most position to make room for the child seat. You may also move the front seat forward to allow more room for the child seat.
3. Attach the lower hooks or connectors of the child restraint to the lower anchorages in the selected seating position.
4. If the child restraint has a tether strap, connect it to the top tether anchorage. See the section "Installing Child Restraints Using The Top Tether Anchorage" for directions to attach a tether anchor.
5. Tighten all of the straps as you push the child restraint rearward and downward into the seat. Remove slack in the straps according to the child restraint manufacturer's instructions.

6. Test that the child restraint is installed tightly by pulling back and forth on the child seat at the belt path. It should not move more than 1 inch (25.4 mm) in any direction.

How To Stow An Unused Switchable-ALR (ALR) Seat Belt

When using the LATCH attaching system to install a child restraint, stow all ALR seat belts that are not being used by other occupants or being used to secure child restraints. An unused belt could injure a child if they play with it and accidentally lock the seat belt retractor. Before installing a child restraint using the LATCH system, buckle the seat belt behind the child restraint and out of the child's reach. If the buckled seat belt interferes with the child restraint installation, instead of buckling it behind the child restraint, route the seat belt through the child restraint belt path and then buckle it. Do not lock the seat belt. Remind all children in the vehicle that the seat belts are not toys and that they should not play with them.

WARNING!

- **Improper installation of a child restraint to the LATCH anchorages can lead to failure of the restraint. The child could be badly injured or killed. Follow the child restraint manufacturer's directions exactly when installing an infant or child restraint.**
- **Child restraint anchorages are designed to withstand only those loads imposed by correctly-fitted child restraints. Under no circumstances are they to be used for adult seat belts, harnesses, or for attaching other items or equipment to the vehicle.**

Installing Child Restraints Using The Vehicle Seat Belt

Child restraint systems are designed to be secured in vehicle seats by lap belts or the lap belt portion of a lap/shoulder belt.

WARNING!

- **Improper installation or failure to properly secure a child restraint can lead to failure of the restraint. The child could be badly injured or killed.**

(Continued)

WARNING! *(Continued)*

- **Follow the child restraint manufacturer's directions exactly when installing an infant or child restraint.**

The seat belts in the passenger seating positions are equipped with a Switchable Automatic Locking Retractor (ALR) that is designed to keep the lap portion of the seat belt tight around the child restraint so that it is not necessary to use a locking clip. The ALR retractor can be "switched" into a locked mode by pulling all of the webbing out of the retractor and then letting the webbing retract back into the retractor. If it is locked, the ALR will make a clicking noise while the webbing is pulled back into the retractor. Refer to the "Automatic Locking Mode" description in "Switchable Automatic Locking Retractors (ALR)" under "Occupant Restraint Systems" for additional information on ALR.

Please see the table below and the following sections for more information.

Lap/Shoulder Belt Systems For Installing Child Restraints In This Vehicle

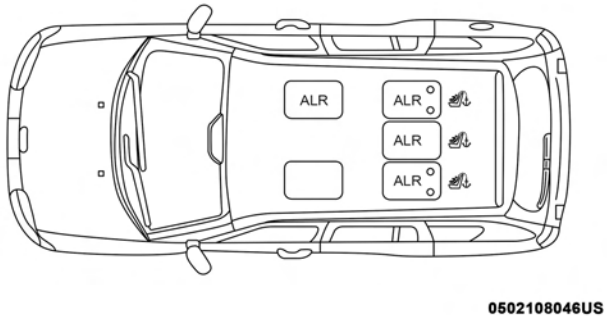

Automatic Locking Retractor (ALR) Locations

- ALR = Switchable Automatic Locking Retractor
- Top Tether Anchorage Symbol

Frequently Asked Questions About Installing Child Restraints With Seat Belts		
What is the weight limit (child's weight + weight of the child restraint) for using the Tether Anchor with the seat belt to attach a forward facing child restraint?	Weight limit of the Child Restraint	Always use the tether anchor when using the seat belt to install a forward facing child restraint, up to the recommended weight limit of the child restraint.
Can the rear-facing child restraint touch the back of the front passenger seat?	Yes	Contact between the front passenger seat and the child restraint is allowed, if the child restraint manufacturer also allows contact.
Can the head restraints be removed?	No	
Can the buckle stalk be twisted to tighten the seat belt against the belt path of the child restraint?	No	Do not twist the buckle stalk in a seating position with an ALR retractor.

Installing A Child Restraint With A Switchable Automatic Locking Retractor (ALR):

Child restraint systems are designed to be secured in vehicle seats by lap belts or the lap belt portion of a lap/shoulder belt.

WARNING!

- **Improper installation or failure to properly secure a child restraint can lead to failure of the restraint. The child could be badly injured or killed.**
- **Follow the child restraint manufacturer's directions exactly when installing an infant or child restraint.**

1. Place the child seat in the center of the seating position. For some second row seats, you may need to recline the seat and/or raise the head restraint to get a better fit. If the rear seat can be moved forward and rearward in the vehicle, you may wish to move it to its rear-most position to make room for the child seat. You may also move the front seat forward to allow more room for the child seat.
2. Pull enough of the seat belt webbing from the retractor to pass it through the belt path of the child restraint. Do not twist the belt webbing in the belt path.
3. Slide the latch plate into the buckle until you hear a "click."
4. Pull on the webbing to make the lap portion tight against the child seat.
5. To lock the seat belt, pull down on the shoulder part of the belt until you have pulled all the seat belt webbing out of the retractor. Then, allow the webbing to retract back into the retractor. As the webbing retracts, you will hear a clicking sound. This means the seat belt is now in the Automatic Locking mode.
6. Try to pull the webbing out of the retractor. If it is locked, you should not be able to pull out any webbing. If the retractor is not locked, repeat step 5.
7. Finally, pull up on any excess webbing to tighten the lap portion around the child restraint while you push the child restraint rearward and downward into the vehicle seat.
8. If the child restraint has a top tether strap and the seating position has a top tether anchorage, connect the tether strap to the anchorage and tighten the tether strap. See the section "Installing Child Restraints Using the Top Tether Anchorage" for directions to attach a tether anchor.
9. Test that the child restraint is installed tightly by pulling back and forth on the child seat at the belt path. It should not move more than 1 inch (25.4 mm) in any direction.

Any seat belt system will loosen with time, so check the belt occasionally, and pull it tight if necessary.

Installing Child Restraints Using the Top Tether Anchorage

WARNING!

Do not attach a tether strap for a rear-facing car seat to any location in front of the car seat, including the seat frame or a tether anchorage. Only attach the tether strap of a rear-facing car seat to the tether anchorage that is approved for that seating position, located behind the top of the vehicle seat. See the section "Lower Anchors and Tethers for CHildren (LATCH) Restraint System" for the location of approved tether anchorages in your vehicle.

1. Look behind the seating position where you plan to install the child restraint to find the tether anchorage. You may need to move the seat forward to provide better access to the tether anchorage. If there is no top tether anchorage for that seating position, move the child restraint to another position in the vehicle if one is available.
2. Route the tether strap to provide the most direct path for the strap between the anchor and the child seat, routing it over the center of the head restraint.
3. Attach the tether strap hook of the child restraint to the top tether anchorage as shown in the diagram.
4. Remove slack in the tether strap according to the child restraint manufacturer's instructions.

WARNING!

- **An incorrectly anchored tether strap could lead to increased head motion and possible injury to the child. Use only the anchorage position directly behind the child seat to secure a child restraint top tether strap.**
- **If your vehicle is equipped with a split rear seat, make sure the tether strap does not slip into the opening between the seatbacks as you remove slack in the strap.**

Transporting Pets

Air Bags deploying in the front seat could harm your pet. An unrestrained pet will be thrown about and possibly injured, or injure a passenger during panic braking or in a collision.

Pets should be restrained in the rear seat in pet harnesses or pet carriers that are secured by seat belts.

SAFETY TIPS

Transporting Passengers

NEVER TRANSPORT PASSENGERS IN THE CARGO AREA.

WARNING!

- **Do not leave children or animals inside parked vehicles in hot weather. Interior heat build-up may cause serious injury or death.**
- **It is extremely dangerous to ride in a cargo area, inside or outside of a vehicle. In a collision, people riding in these areas are more likely to be seriously injured or killed.**

(Continued)

WARNING! *(Continued)*

- **Do not allow people to ride in any area of your vehicle that is not equipped with seats and seat belts.**
- **Be sure everyone in your vehicle is in a seat and using a seat belt properly.**

Exhaust Gas

WARNING!

Exhaust gases can injure or kill. They contain carbon monoxide (CO), which is colorless and odorless. Breathing it can make you unconscious and can eventually poison you. To avoid breathing (CO), follow these safety tips since vehicle equipped with a gas engine the following applies:

- **Do not run the engine in a closed garage or in confined areas any longer than needed to move your vehicle in or out of the area.**
- **If you are required to drive with the trunk/liftgate/rear doors open, make sure that all windows are closed and the climate control BLOWER switch is set at high speed. DO NOT use the recirculation mode.**

(Continued)

WARNING! *(Continued)*

- **If it is necessary to sit in a parked vehicle with the engine running, adjust your heating or cooling controls to force outside air into the vehicle. Set the blower at high speed.**

The best protection against carbon monoxide entry into the vehicle body is a properly maintained engine exhaust system.

Whenever a change is noticed in the sound of the exhaust system, when exhaust fumes can be detected inside the vehicle, or when the underside or rear of the vehicle is damaged, have a competent mechanic inspect the complete exhaust system and adjacent body areas for broken, damaged, deteriorated, or mispositioned parts. Open seams or loose connections could permit exhaust fumes to seep into the passenger compartment. In addition, inspect the exhaust system each time the vehicle is raised for lubrication or oil change. Replace as required.

Safety Checks You Should Make Inside The Vehicle

Seat Belts

Inspect the seat belt system periodically, checking for cuts, frays, and loose parts. Damaged parts must be replaced immediately. Do not disassemble or modify the system.

Front seat belt assemblies must be replaced after a collision. Rear seat belt assemblies must be replaced after a collision if they have been damaged (i.e., bent retractor, torn webbing, etc.). If there is any question regarding seat belt or retractor condition, replace the seat belt.

Air Bag Warning Light

The Air Bag warning light will turn on for four to eight seconds as a bulb check when the ignition switch is first turned to ON/RUN. If the light is either not on during starting, stays on, or turns on while driving, have the system inspected at an authorized dealer as soon as possible. This light will illuminate with a single chime when a fault with the Air Bag Warning Light has been detected, it will stay on until the fault is cleared. If the light comes on intermittently or remains on while driving, have an authorized dealer service the vehicle immediately. Refer to “Occupant Restraint Systems” in “Safety” for further information.

Defroster

Check operation by selecting the defrost mode and place the blower control on high speed. You should be able to feel the air directed against the windshield. See your authorized dealer for service if your defroster is inoperable.

Floor Mat Safety Information

Always use floor mats designed to fit your vehicle. Only use a floor mat that does not interfere with the operation of the accelerator, brake or clutch pedals. Only use a floor mat that is securely attached using the floor mat fasteners so it cannot slip out of position and interfere with the accelerator, brake or clutch pedals or impair safe operation of your vehicle in other ways.

WARNING!

An improperly attached, damaged, folded, or stacked floor mat, or damaged floor mat fasteners may cause your floor mat to interfere with the accelerator, brake, or clutch pedals and cause a loss of vehicle control. To prevent SERIOUS INJURY or DEATH:

(Continued)

WARNING! ***(Continued)***

- **ALWAYS securely attach your floor mat using the floor mat fasteners. DO NOT install your floor mat upside down or turn your floor mat over. Lightly pull to confirm mat is secured using the floor mat fasteners on a regular basis.**
- **ALWAYS REMOVE THE EXISTING FLOOR MAT FROM THE VEHICLE before installing any other floor mat. NEVER install or stack an additional floor mat on top of an existing floor mat.**
- **ONLY install floor mats designed to fit your vehicle. NEVER install a floor mat that cannot be properly attached and secured to your vehicle. If a floor mat needs to be replaced, only use a FCA approved floor mat for the specific make, model, and year of your vehicle.**
- **ONLY use the driver's side floor mat on the driver's side floor area. To check for interference, with the vehicle properly parked with the engine off, fully depress the accelerator, the brake, and the clutch pedal (if present) to check for interference. If your floor mat interferes with the operation of any pedal, or is not secure to the floor, remove the floor mat from the vehicle and place the floor mat in your trunk.**

(Continued)

WARNING! *(Continued)*

- **ONLY use the passenger's side floor mat on the passenger's side floor area.**
- **ALWAYS make sure objects cannot fall or slide into the driver's side floor area when the vehicle is moving. Objects can become trapped under accelerator, brake, or clutch pedals and could cause a loss of vehicle control.**
- **NEVER place any objects under the floor mat (e.g., towels, keys, etc.). These objects could change the position of the floor mat and may cause interference with the accelerator, brake, or clutch pedals.**
- **If the vehicle carpet has been removed and re-installed, always properly attach carpet to the floor and check the floor mat fasteners are secure to the vehicle carpet. Fully depress each pedal to check for interference with the accelerator, brake, or clutch pedals then re-install the floor mats.**
- **It is recommended to only use mild soap and water to clean your floor mats. After cleaning, always check your floor mat has been properly installed and is secured to your vehicle using the floor mat fasteners by lightly pulling mat.**

Periodic Safety Checks You Should Make Outside The Vehicle

Tires

Examine tires for excessive tread wear and uneven wear patterns. Check for stones, nails, glass, or other objects lodged in the tread or sidewall. Inspect the tread for cuts and cracks. Inspect sidewalls for cuts, cracks, and bulges. Check the wheel nuts for tightness. Check the tires (including spare) for proper cold inflation pressure.

Lights

Have someone observe the operation of brake lights and exterior lights while you work the controls. Check turn signal and high beam indicator lights on the instrument panel.

Door Latches

Check for proper closing, latching, and locking.

Fluid Leaks

Check area under vehicle after overnight parking for fuel, coolant, oil, or other fluid leaks. Also, if gasoline fumes are detected or if fuel, or brake fluid leaks are suspected. The cause should be located and corrected immediately.

STARTING AND OPERATING

CONTENTS

■ STARTING PROCEDURES 197
- □ Manual Transmission — If Equipped 197
- □ Automatic Transmission — If Equipped 197
- □ Normal Starting 198
- □ Extreme Cold Weather (Below –22°F Or –30°C) .198
- □ If Engine Fails To Start 198
- □ After Starting. 199

■ ENGINE BLOCK HEATER — IF EQUIPPED 199

■ ENGINE BREAK-IN RECOMMENDATIONS 199

■ PARKING BRAKE 200

■ MANUAL TRANSMISSION — IF EQUIPPED 202
- □ Five-Speed Manual Transmission. 202
- □ Recommended Shift Speeds 203
- □ Downshifting 204

■ AUTOMATIC TRANSMISSION — IF EQUIPPED .204
- □ Key Ignition Park Interlock 205
- □ Brake/Transmission Shift Interlock System 205
- □ Six-Speed Automatic Transmission — If Equipped 205
- □ Continuously Variable Automatic Transmission (CVT) — If Equipped 212

■ FOUR-WHEEL DRIVE OPERATION — IF EQUIPPED 217

■ POWER STEERING 218
- □ Power Steering Fluid Check 218

■ SPEED CONTROL — IF EQUIPPED 219
- □ To Activate 220
- □ To Set A Desired Speed. 220
- □ To Deactivate 220

- To Resume Speed 220
- To Vary The Speed Setting 220
- To Accelerate For Passing 221

■ PARKVIEW REAR BACK UP CAMERA — IF EQUIPPED 222

■ ADDING FUEL 223
- Fuel Filler Cap (Gas Cap) 223
- Loose Fuel Filler Cap Message 225

■ VEHICLE LOADING 225
- Certification Label 225

■ TRAILER TOWING 227
- Common Towing Definitions. 227
- Trailer Hitch Classification 229
- Trailer Towing Weights (Maximum Trailer Weight Ratings) 230
- Trailer And Tongue Weight 230
- Towing Requirements 231
- Towing Tips 235

■ RECREATIONAL TOWING (BEHIND MOTORHOME, ETC.) 237
- Towing This Vehicle Behind Another Vehicle. . . .237

■ DRIVING TIPS 238
- On-Road Driving Tips 238
- Off-Road Driving Tips 238

STARTING PROCEDURES

Before starting your vehicle, adjust your seat, adjust both inside and outside mirrors, and fasten your seat belts.

WARNING!

- **Before exiting a vehicle, always shift the transmission into PARK, apply the parking brake and remove the key fob from the ignition. When leaving the vehicle, always lock your vehicle.**
- **Never leave children alone in a vehicle, or with access to an unlocked vehicle.**
- **Allowing children to be in a vehicle unattended is dangerous for a number of reasons. A child or others could be seriously or fatally injured. Children should be warned not to touch the parking brake, brake pedal or the gear selector.**
- **Do not leave the key fob in or near the vehicle, or in a location accessible to children. A child could operate power windows, other controls, or move the vehicle.**

Manual Transmission — If Equipped

Before starting the engine fully apply the parking brake, press the clutch pedal to the floor, and place the gear selector in NEUTRAL.

NOTE:

- The engine will not start unless the clutch pedal is pressed to the floor.
- If the key will not turn and the steering wheel is locked, rotate the wheel in either direction to relieve pressure on the locking mechanism and then turn the key.

Automatic Transmission — If Equipped

The gear selector must be in the PARK or NEUTRAL position before you can start the engine. Press the brake pedal before shifting to any driving gear.

NOTE: You must press the brake pedal before shifting out of PARK.

Tip Start

Do not press the accelerator. Turn the ignition switch to the START position and release it as soon as the starter engages. The starter motor will continue to run, and it will disengage automatically when the engine is running. If the

engine fails to start, the starter will disengage automatically in 10 seconds. If this occurs, turn the ignition switch to the LOCK position, wait 10 to 15 seconds, then repeat the "Normal Starting" procedure.

Normal Starting

Normal starting of either a cold or a warm engine does not require pumping or pressing the accelerator pedal. Simply turn the ignition switch to the START position and release when the engine starts. If the engine fails to start within 15 seconds, turn the ignition switch to the OFF position, wait 10 to 15 seconds, then repeat the "Normal Starting" procedure.

WARNING!

Do not attempt to push or tow your vehicle to get it started. Vehicles equipped with an automatic transmission cannot be started this way. Unburned fuel could enter the catalytic converter and once the engine has started, ignite and damage the converter and vehicle. If the vehicle has a discharged battery, booster cables may be used to obtain a start from another vehicle. This type of start can be dangerous if done improperly,

(Continued)

WARNING! ***(Continued)***

so follow the procedure carefully. Refer to "Jump-Starting Procedure" in "In Case Of Emergency" for further information.

Extreme Cold Weather (Below –22°F Or –30°C)

To ensure reliable starting at these temperatures, use of an externally powered electric engine block heater (available from your authorized dealer) is recommended.

If Engine Fails To Start

If the engine fails to start after you have followed the "Normal Starting" and "Extreme Cold Weather" procedures, it may be flooded. Press the accelerator pedal all the way to the floor and hold it there. Crank the engine for no more than 15 seconds. This should clear any excess fuel in case the engine is flooded. Leave the ignition key in the ON position, release the accelerator pedal and repeat the "Normal Starting" procedure.

WARNING!

Never pour fuel or other flammable liquid into the throttle body air inlet opening in an attempt to start the vehicle. This could result in flash fire causing serious personal injury.

CAUTION!

To prevent damage to the starter, do not crank the engine for more than 15 seconds at a time. Wait 10 to 15 seconds before trying again.

After Starting

The idle speed is controlled automatically, and it will decrease as the engine warms up.

ENGINE BLOCK HEATER — IF EQUIPPED

The engine block heater warms the engine, and permits quicker starts in cold weather. Connect the cord to a standard 110-115 Volt AC electrical outlet with a grounded, three-wire extension cord.

The engine block heater must be plugged in at least one hour to have an adequate warming effect on the engine.

WARNING!

Remember to disconnect the engine block heater cord before driving. Damage to the 110-115 Volt electrical cord could cause electrocution.

ENGINE BREAK-IN RECOMMENDATIONS

A long break-in period is not required for the engine and drivetrain (transmission and axle) in your vehicle.

Drive moderately during the first 300 miles (500 km). After the initial 60 miles (100 km), speeds up to 50 or 55 mph (80 or 90 km/h) are desirable.

While cruising, brief full-throttle acceleration within the limits of local traffic laws contributes to a good break-in. Wide-open throttle acceleration in low gear can be detrimental and should be avoided.

The engine oil installed in the engine at the factory is a high-quality energy conserving type lubricant. Oil changes should be consistent with anticipated climate conditions under which vehicle operations will occur. For the recommended viscosity and quality grades, refer to “Dealer Service” in “Servicing And Maintenance”.

CAUTION!

Never use Non-Detergent Oil or Straight Mineral Oil in the engine or damage may result.

NOTE: A new engine may consume some oil during its first few thousand miles (kilometers) of operation. This should be considered a normal part of the break-in and not interpreted as a problem.

PARKING BRAKE

Before leaving the vehicle, make sure that the parking brake is fully applied. Also, be certain to leave an automatic transmission in PARK, or manual transmission in REVERSE or first gear.

The parking brake lever is located in the center console. To apply the parking brake, pull the lever up as firmly as possible. To release the parking brake, pull the lever up slightly, push the center button, then lower the lever completely.

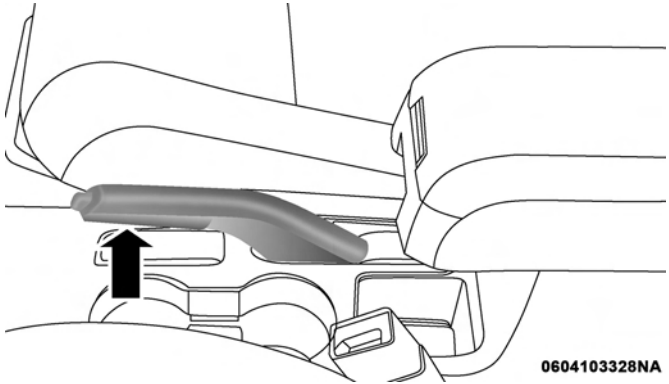

Parking Brake

When the parking brake is applied with the ignition switch in the ON position, the "Brake Warning Light" in the instrument cluster will illuminate.

NOTE:

- When the parking brake is applied and the automatic transmission is placed in gear, the "Brake Warning Light" will flash. If vehicle speed is detected, a chime will sound to alert the driver. Fully release the parking brake before attempting to move the vehicle.
- This light only shows that the parking brake is applied. It does not show the degree of brake application.

When parking on a hill, it is important to turn the front wheels toward the curb on a downhill grade and away from the curb on an uphill grade. For vehicles equipped with an automatic transmission, apply the parking brake before placing the gear selector in PARK, otherwise the load on the transmission locking mechanism may make it difficult to move the gear selector out of PARK. The parking brake should always be applied whenever the driver is not in the vehicle.

WARNING!

- **When leaving the vehicle, always remove the key fob from the ignition and lock your vehicle.**
- **Never leave children alone in a vehicle, or with access to an unlocked vehicle.**
- **Allowing children to be in a vehicle unattended is dangerous for a number of reasons. A child or others could be seriously or fatally injured. Children should be warned not to touch the parking brake, brake pedal or the gear selector.**
- **Do not leave the key fob in or near the vehicle, or in a location accessible to children. A child could operate power windows, other controls, or move the vehicle.**

(Continued)

WARNING! ***(Continued)***

- **Be sure the parking brake is fully disengaged before driving; failure to do so can lead to brake failure and a collision.**
- **Always fully apply the parking brake when leaving your vehicle or it may roll and cause damage or injury. Also, be certain to leave an automatic transmission in PARK, a manual transmission in REVERSE or first gear. Failure to do so may cause the vehicle to roll and cause damage or injury.**

CAUTION!

If the Brake System Warning Light remains on with the parking brake released, a brake system malfunction is indicated. Have the brake system serviced by an authorized dealer immediately.

MANUAL TRANSMISSION — IF EQUIPPED

Five-Speed Manual Transmission

WARNING!

You or others could be injured if you leave the vehicle unattended without having the parking brake fully applied. The parking brake should always be applied when the driver is not in the vehicle, especially on an incline.

Fully press the clutch pedal before you shift gears. As you release the clutch pedal, lightly press the accelerator pedal.

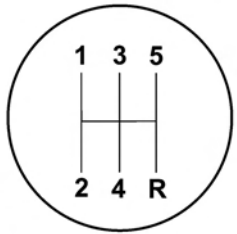

80f7bc4b

Shift Pattern

Use each gear in numerical order, do not skip a gear. Be sure the transmission is in first gear, (not third), when starting from a standing position. Damage to the clutch can result from starting in a gear higher than first gear.

CAUTION!

- **Launching in any gear except 1st gear will result in excessive slipping of the clutch and potentially lugging or stalling the engine.**

(Continued)

CAUTION! *(Continued)*

- **Use each gear in numerical order, do not skip a gear. Be sure the transmission is in first gear, (not third), when starting from a standing position. Damage to the clutch can result from starting in a gear higher than first gear.**

For most city driving, you will find it easier to use only the lower gears. For steady highway driving with light accelerations, fifth gear is recommended.

Never drive with your foot resting on the clutch pedal, and never try to hold the vehicle on a hill with the clutch pedal partially engaged. This will cause abnormal wear on the clutch.

Never shift into REVERSE until the vehicle has come to a complete stop.

NOTE: During cold weather, until the transmission lubricant is warm, you may experience slightly higher shift efforts. This is normal and not harmful to the transmission.

Recommended Shift Speeds

To use your manual transmission for optimal fuel economy, it should be upshifted as listed in the following table.

Manual Transmission Recommended Shift Speeds					
Units in mph (km/h)					
Engine Size	Acceleration Rate	1 to 2	2 to 3	3 to 4	4 to 5
All Engines	Accel	14 (23)	23 (37)	29 (47)	45 (72)
	Cruise	12 (19)	18 (29)	25 (40)	32 (52)

Downshifting

Proper downshifting will improve fuel economy and prolong engine life.

CAUTION!

If you skip a gear while downshifting or downshift at too high of a vehicle speed, these conditions may cause the engine to overspeed if too low of a gear is selected and the clutch pedal is released. Damage to the clutch and the transmission can result from skipping a gear while downshifting or downshifting at too high of a vehicle speed even if the clutch pedal is held pressed (i.e., not released).

To maintain a safe speed and prolong brake life, shift down to second or first gear when descending a steep grade.

When turning a corner or driving up a steep grade, downshift early so that the engine will not be overburdened.

AUTOMATIC TRANSMISSION — IF EQUIPPED

CAUTION!

Damage to the transmission may occur if the following precautions are not observed:

- **Shift into or out of PARK or REVERSE only after the vehicle has come to a complete stop.**
- **Do not shift between PARK, REVERSE, NEUTRAL, or DRIVE when the engine is above idle speed.**
- **Before shifting into any gear, make sure your foot is firmly pressing the brake pedal.**

NOTE: You must press and hold the brake pedal while shifting out of PARK.

WARNING!

- **It is dangerous to shift out of PARK or NEUTRAL if the engine speed is higher than idle speed. If your foot is not firmly pressing the brake pedal, the vehicle could accelerate quickly forward or in reverse. You could lose control of the vehicle and hit someone or something. Only shift into gear when the engine is idling normally and your foot is firmly pressing the brake pedal.**

(Continued)

WARNING! *(Continued)*

- **Unintended movement of a vehicle could injure those in or near the vehicle. As with all vehicles, you should never exit a vehicle while the engine is running. Before exiting a vehicle always apply the parking brake, shift the transmission into PARK, turn the engine OFF, and remove the ignition key. Once the key is removed, the transmission is locked in PARK, securing the vehicle against unwanted movement.**
- **When leaving the vehicle, always remove the ignition key from the vehicle and lock the vehicle.**
- **Never leave children alone in a vehicle, or with access to an unlocked vehicle. Allowing children to be in a vehicle unattended is dangerous for a number of reasons. A child or others could be seriously or fatally injured. Children should be warned not to touch the parking brake, brake pedal or the transmission gear selector.**
- **Do not leave the ignition key in or near the vehicle (or in a location accessible to children). A child could operate power windows, other controls, or move the vehicle.**

Key Ignition Park Interlock

This vehicle is equipped with a Key Ignition Park Interlock which requires the transmission to be in PARK before the ignition switch can be turned to the LOCK/OFF (key removal) position. The key can only be removed from the ignition when the ignition is in the LOCK/OFF position, and once removed the transmission is locked in PARK.

NOTE: If a malfunction occurs, the system will trap the key in the ignition switch to warn you that this safety feature is inoperable. The engine can be started and stopped but the key cannot be removed until you obtain service.

Brake/Transmission Shift Interlock System

This vehicle is equipped with a Brake Transmission Shift Interlock system (BTSI) that holds the gear selector in PARK unless the brakes are applied. To shift the transmission out of PARK, the ignition switch must be turned to the ON/RUN position (engine running or not) and the brake pedal must be pressed.

Six-Speed Automatic Transmission — If Equipped

The transmission gear position display (located in the instrument cluster) indicates the transmission gear range. You must press the brake pedal to move the gear selector

out of PARK (refer to "Brake/Transmission Shift Interlock System" in this section). To drive, move the gear selector from PARK or NEUTRAL to the DRIVE position.

The electronically-controlled transmission provides a precise shift schedule. The transmission electronics are self-calibrating; therefore, the first few shifts on a new vehicle may be somewhat abrupt. This is a normal condition, and precision shifts will develop within a few hundred miles (kilometers).

Only shift from DRIVE to PARK or REVERSE when the accelerator pedal is released and the vehicle is stopped. Be sure to keep your foot on the brake pedal when shifting between these gears.

The transmission gear selector has only PARK, REVERSE, NEUTRAL, and DRIVE shift positions. Manual shifts can be made using the AutoStick shift control (refer to "AutoStick (Six-Speed Automatic Transmission)" in this section). Moving the gear selector to the left or right (-/+) while in the DRIVE position will manually select the transmission gear, and will display the current gear in the instrument cluster as 1, 2, 3, etc.

Gear Ranges

DO NOT race the engine when shifting from PARK or NEUTRAL into another gear range.

NOTE: After selecting any gear range, wait a moment to allow the selected gear to engage before accelerating. This is especially important when the engine is cold.

PARK (P)

This range supplements the parking brake by locking the transmission. The engine can be started in this range. Never attempt to use PARK while the vehicle is in motion. Apply the parking brake when leaving the vehicle in this range.

When parking on a level surface, you may shift the transmission into PARK first, and then apply the parking brake.

When parking on a hill, apply the parking brake before shifting the transmission to PARK, otherwise the load on the transmission locking mechanism may make it difficult to move the gear selector out of PARK. As an added precaution, turn the front wheels toward the curb on a downhill grade and away from the curb on an uphill grade.

WARNING!

- Never use the PARK position as a substitute for the parking brake. Always apply the parking brake fully when exiting the vehicle to guard against vehicle movement and possible injury or damage.
- Your vehicle could move and injure you and others if it is not in PARK. Check by trying to move the gear selector out of PARK with the brake pedal released. Make sure the transmission is in PARK before leaving the vehicle.
- It is dangerous to shift out of PARK or NEUTRAL if the engine speed is higher than idle speed. If your foot is not firmly pressing the brake pedal, the vehicle could accelerate quickly forward or in reverse. You could lose control of the vehicle and hit someone or something. Only shift into gear when the engine is idling normally and your foot is firmly pressing the brake pedal.
- Unintended movement of a vehicle could injure those in or near the vehicle. As with all vehicles, you should never exit a vehicle while the engine is running. Before exiting a vehicle always apply the parking brake, shift the transmission into PARK,

(Continued)

WARNING! *(Continued)*

turn the engine OFF, and remove the ignition key. Once the key is removed, the transmission is locked in PARK, securing the vehicle against unwanted movement.
- When leaving the vehicle, always remove the ignition key from the vehicle and lock the vehicle.
- Never leave children alone in a vehicle, or with access to an unlocked vehicle. Allowing children to be in a vehicle unattended is dangerous for a number of reasons. A child or others could be seriously or fatally injured. Children should be warned not to touch the parking brake, brake pedal or the transmission gear selector.
- Do not leave the ignition key in or near the vehicle (or in a location accessible to children). A child could operate power windows, other controls, or move the vehicle.

CAUTION!

- **Before moving the gear selector out of PARK, you must turn the ignition switch from the LOCK/OFF position to the ON/RUN position, and also press the brake pedal. Otherwise, damage to the gear selector could result.**
- **DO NOT race the engine when shifting from PARK or NEUTRAL into another gear range, as this can damage the drivetrain.**

The following indicators should be used to ensure that you have engaged the transmission into the PARK position:

- When shifting into PARK, firmly move the gear selector all the way forward and to the left until it stops and is fully seated.
- Look at the transmission gear position display and verify that it indicates the PARK position (P).
- With brake pedal released, verify that the gear selector will not move out of PARK.

REVERSE (R)

This range is for moving the vehicle backward. Shift into REVERSE only after the vehicle has come to a complete stop.

NEUTRAL (N)

Use this range when the vehicle is standing for prolonged periods with the engine running. The engine may be started in this range. Apply the parking brake and shift the transmission into PARK if you must leave the vehicle.

WARNING!

Do not coast in NEUTRAL and never turn off the ignition to coast down a hill. These are unsafe practices that limit your response to changing traffic or road conditions. You might lose control of the vehicle and have a collision.

CAUTION!

Towing the vehicle, coasting, or driving for any other reason with the transmission in NEUTRAL can cause severe transmission damage. Refer to "Recreational

(Continued)

CAUTION! ***(Continued)***

Towing" in "Starting And Operating" and "Towing A Disabled Vehicle" in "In Case Of Emergency" for further information.

DRIVE (D)

This range should be used for most city and highway driving. It provides the smoothest upshifts and downshifts, and the best fuel economy. The transmission automatically upshifts through underdrive first, second, third, and fourth gears, direct fifth gear and overdrive sixth gear. The DRIVE position provides optimum driving characteristics under all normal operating conditions.

When frequent transmission shifting occurs (such as when operating the vehicle under heavy loading conditions, in hilly terrain, traveling into strong head winds, or while towing heavy trailers), use the AutoStick shift control (refer to "AutoStick (Six-Speed Automatic Transmission)" in this section for further information) to select a lower gear. Under these conditions, using a lower gear will improve performance and extend transmission life by reducing excessive shifting and heat buildup.

If the transmission temperature exceeds normal operating limits, the transmission controller will modify the transmission shift schedule and expand the range of torque converter clutch engagement. This is done to prevent transmission damage due to overheating. If the transmission becomes extremely hot, the "Transmission Temperature Warning Light" may illuminate and the transmission may operate differently until the transmission cools down.

During very cold temperatures (-4°F [-20°C] or below), transmission operation may be modified depending on engine and transmission temperature as well as vehicle speed. Normal operation will resume once the transmission temperature has risen to a suitable level.

AutoStick (Six-Speed Automatic Transmission) — If Equipped

AutoStick is a driver-interactive transmission feature providing manual shift control, giving you more control of the vehicle. AutoStick allows you to maximize engine braking, eliminate undesirable upshifts and downshifts, and improve overall vehicle performance. This system can also provide you with more control during passing, city driving, cold slippery conditions, mountain driving, trailer towing, and many other situations.

Operation

When the gear selector is in the DRIVE position, the transmission will operate automatically, shifting between the six available gears. To engage AutoStick, simply tap the gear selector to the right or left (+/-) while in the DRIVE position. Tapping (-) to enter AutoStick mode will downshift the transmission to the next lower gear, while using (+) to enter AutoStick mode will retain the current gear. When AutoStick is active, the current transmission gear is displayed in the instrument cluster.

In AutoStick mode, the transmission will shift up or down when the driver moves the gear selector to the right (+) or left (-), unless an engine lugging or overspeed condition would result. It will remain in the selected gear until another upshift or downshift is chosen, except as described below:

- The transmission will automatically upshift when necessary to prevent engine over-speed.
- The transmission will automatically downshift as the vehicle slows (to prevent engine lugging) and will display the current gear.
- The transmission will automatically downshift to first gear when coming to a stop. After a stop, the driver should manually upshift (+) the transmission as the vehicle is accelerated.
- You can start out, from a stop, in first or second gear. Tapping (+) (at a stop) will allow starting in second gear. Starting out in second gear can be helpful in snowy or icy conditions.
- If a requested downshift would cause the engine to overspeed, that shift will not occur.
- Avoid using speed control when AutoStick is engaged.
- Transmission shifting will be more noticeable when AutoStick is engaged.
- The system may revert to automatic shift mode if a fault or overheat condition is detected.

To disengage AutoStick mode, hold the gear selector to the right (+) until “D” is once again displayed in the instrument cluster. You can shift in or out of the AutoStick mode at any time without taking your foot off the accelerator pedal.

WARNING!

Do not downshift for additional engine braking on a slippery surface. The drive wheels could lose their grip and the vehicle could skid, causing a collision or personal injury.

Transmission Limp Home Mode

Transmission function is monitored electronically for abnormal conditions. If a condition is detected that could result in transmission damage, Transmission Limp Home Mode is activated. In this mode, the transmission remains in fourth gear regardless of which forward gear is selected. PARK, REVERSE, and NEUTRAL will continue to operate. The Malfunction Indicator Light (MIL) may be illuminated. Limp Home Mode allows the vehicle to be driven to an authorized dealer for service without damaging the transmission.

In the event of a momentary problem, the transmission can be reset to regain all forward gears by performing the following steps:

1. Stop the vehicle.
2. Shift the transmission into PARK.
3. Turn the ignition switch to the OFF position.
4. Wait approximately 10 seconds.
5. Restart the engine.
6. Shift into the desired gear range. If the problem is no longer detected, the transmission will return to normal operation.

NOTE: Even if the transmission can be reset, we recommend that you visit your authorized dealer at your earliest possible convenience. Your authorized dealer has diagnostic equipment to determine if the problem could recur.

If the transmission cannot be reset, authorized dealer service is required.

Overdrive Operation

The automatic transmission includes an electronically controlled Overdrive (sixth gear). The transmission will automatically shift into Overdrive if the following conditions are present:

- The gear selector is in the DRIVE position.
- The transmission fluid has reached an adequate temperature.

- The engine coolant has reached an adequate temperature.
- The vehicle speed is sufficiently high.
- The driver is not heavily pressing the accelerator.

Torque Converter Clutch

A feature designed to improve fuel economy has been included in the automatic transmission on your vehicle. A clutch within the torque converter engages automatically at calibrated speeds. This may result in a slightly different feeling or response during normal operation in the upper gears. When the vehicle speed drops or during some accelerations, the clutch automatically disengages.

NOTE: Engagement of the torque converter clutch is inhibited at very cold temperatures. Because the engine speed is higher when the torque converter clutch is not engaged, it may seem as if the transmission is not shifting into Overdrive when cold. This is normal. The torque converter clutch will function normally once the transmission is sufficiently warm.

Continuously Variable Automatic Transmission (CVT) — If Equipped

The transmission gear position display (located in the instrument cluster) indicates the transmission gear range. You must press the brake pedal to move the gear selector out of PARK (refer to "Brake/Transmission Shift Interlock System" in this section). To drive, move the gear selector from PARK or NEUTRAL to the DRIVE position.

NOTE: The Continuously Variable Automatic Transmission (CVT) changes ratios in a continuous manner. This may sometimes "feel" as if it is slipping, but this is normal and does not harm anything.

Only shift from DRIVE to PARK or REVERSE when the accelerator pedal is released and the vehicle is stopped. Be sure to keep your foot on the brake pedal when shifting between these gears.

The transmission gear selector has only PARK, REVERSE, NEUTRAL, and DRIVE shift positions. Manual shifts can be made using the AutoStick shift control (refer to "AutoStick (CVT)" in this section). Moving the gear selector to the left or right (-/+) while in the DRIVE position will manually select from a set of predefined transmission gear ratios, and will display the current gear in the instrument cluster as 1, 2, 3, etc.

Gear Ranges

DO NOT race the engine when shifting from PARK or NEUTRAL into another gear range.

NOTE: After selecting any gear range, wait a moment to allow the selected gear to engage before accelerating. This is especially important when the engine is cold.

PARK (P)

This range supplements the parking brake by locking the transmission. The engine can be started in this range. Never attempt to use PARK while the vehicle is in motion. Apply the parking brake when leaving the vehicle in this range.

When parking on a level surface, you may shift the transmission into PARK first, and then apply the parking brake.

When parking on a hill, apply the parking brake before shifting the transmission to PARK, otherwise the load on the transmission locking mechanism may make it difficult to move the gear selector out of PARK. As an added precaution, turn the front wheels toward the curb on a downhill grade and away from the curb on an uphill grade.

WARNING!

- **Never use the PARK position as a substitute for the parking brake. Always apply the parking brake fully when exiting the vehicle to guard against vehicle movement and possible injury or damage.**
- **Your vehicle could move and injure you and others if it is not in PARK. Check by trying to move the gear selector out of PARK with the brake pedal released. Make sure the transmission is in PARK before leaving the vehicle.**
- **It is dangerous to shift out of PARK or NEUTRAL if the engine speed is higher than idle speed. If your foot is not firmly pressing the brake pedal, the vehicle could accelerate quickly forward or in reverse. You could lose control of the vehicle and hit someone or something. Only shift into gear when the engine is idling normally and your foot is firmly pressing the brake pedal.**
- **Unintended movement of a vehicle could injure those in or near the vehicle. As with all vehicles, you should never exit a vehicle while the engine is running. Before exiting a vehicle always apply the parking brake, shift the transmission into PARK,**

(Continued)

WARNING! *(Continued)*

turn the engine OFF, and remove the ignition key. Once the key is removed, the transmission is locked in PARK, securing the vehicle against unwanted movement.

- **When leaving the vehicle, always remove the ignition key from the vehicle and lock the vehicle.**
- **Never leave children alone in a vehicle, or with access to an unlocked vehicle. Allowing children to be in a vehicle unattended is dangerous for a number of reasons. A child or others could be seriously or fatally injured. Children should be warned not to touch the parking brake, brake pedal or the transmission gear selector.**
- **Do not leave the ignition key in or near the vehicle (or in a location accessible to children). A child could operate power windows, other controls, or move the vehicle.**

CAUTION!

- **Before moving the gear selector out of PARK, you must turn the ignition switch from the LOCK/OFF**

(Continued)

CAUTION! *(Continued)*

position to the ON/RUN position, and also press the brake pedal. Otherwise, damage to the gear selector could result.

- **DO NOT race the engine when shifting from PARK or NEUTRAL into another gear range, as this can damage the drivetrain.**

The following indicators should be used to ensure that you have engaged the transmission into the PARK position:

- When shifting into PARK, firmly move the gear selector all the way forward and to the left until it stops and is fully seated.
- Look at the transmission gear position display and verify that it indicates the PARK position (P).
- With brake pedal released, verify that the gear selector will not move out of PARK.

REVERSE (R)

This range is for moving the vehicle backward. Shift into REVERSE only after the vehicle has come to a complete stop.

NEUTRAL (N)

Use this range when the vehicle is standing for prolonged periods with the engine running. The engine may be started in this range. Apply the parking brake and shift the transmission into PARK if you must leave the vehicle.

WARNING!

Do not coast in NEUTRAL and never turn off the ignition to coast down a hill. These are unsafe practices that limit your response to changing traffic or road conditions. You might lose control of the vehicle and have a collision.

CAUTION!

Towing the vehicle, coasting, or driving for any other reason with the transmission in NEUTRAL can cause severe transmission damage. Refer to "Recreational Towing" in "Starting And Operating" and "Towing A Disabled Vehicle" in "In Case Of Emergency" for further information.

DRIVE (D)

This range should be used for most city and highway driving. It provides the best fuel economy. The DRIVE position provides optimum driving characteristics under all normal operating conditions.

When frequent transmission shifting occurs (such as when operating the vehicle under heavy loading conditions, in hilly terrain, traveling into strong head winds, or while towing a heavy trailer), use the AutoStick shift control (refer to "AutoStick (CVT)" in this section for further information) to select a lower gear ratio. Under these conditions, using a lower gear ratio will improve performance and extend transmission life by reducing excessive shifting and heat buildup.

During sustained high speed driving or trailer towing up long grades on hot days, the automatic transmission oil may become too hot. If this happens, the transmission overheat indicator light will come on, and the vehicle will slow slightly until the transmission cools down enough to allow a return to the requested speed. This is done to prevent transmission damage due to overheating. If the high speed is maintained, the overheating may reoccur, as before, in a cyclic fashion.

AutoStick (CVT) — If Equipped

AutoStick is a driver-interactive transmission feature providing six manually selectable gear ratios, giving you more control of the vehicle. AutoStick allows you to maximize engine braking, eliminate undesirable upshifts and downshifts, and improve overall vehicle performance. This system can also provide you with more control during passing, city driving, cold slippery conditions, mountain driving, trailer towing, and many other situations.

Operation

NOTE: AutoStick is not available until the CVT warms up in cold weather.

When the gear selector is in the DRIVE position, AutoStick is activated by moving the gear selector side-to-side. Moving the gear selector to the right (+) will activate AutoStick and shift up to the next higher manual ratio, unless you are already operating in or near Overdrive, in which case sixth gear ratio will be selected. In like manner, moving the gear selector to the left (-) will activate AutoStick and shift to the next lower manual ratio. The manually-selected gear will be displayed in the instrument cluster.

In AutoStick mode, the transmission will shift up or down when (+/-) is manually selected by the driver, unless an engine lugging or overspeed condition would result. It will remain in the selected gear until another upshift or downshift is chosen, except as described below:

- The transmission will automatically upshift when necessary to prevent engine over-speed.
- The transmission will automatically downshift as the vehicle slows (to prevent engine lugging) and will display the current gear.
- The transmission will automatically downshift to first gear when coming to a stop. After a stop, the driver should manually upshift (+) the transmission as the vehicle is accelerated.
- If a requested downshift would cause the engine to overspeed, that shift will not occur.
- Transmission shifting will be more noticeable when AutoStick is engaged.
- Heavy Anti-Lock Brake System (ABS) application will disengage AutoStick mode.
- The system may revert to automatic shift mode if a fault or overheat condition is detected.

To disengage AutoStick mode, hold the gear selector to the right (+) until "D" is once again displayed in the instrument cluster. You can shift in or out of the AutoStick mode at any time without taking your foot off the accelerator pedal.

WARNING!

Do not downshift for additional engine braking on a slippery surface. The drive wheels could lose their grip and the vehicle could skid, causing a collision or personal injury.

FOUR-WHEEL DRIVE OPERATION — IF EQUIPPED

This feature provides full time, on-demand, four–wheel drive (4WD).

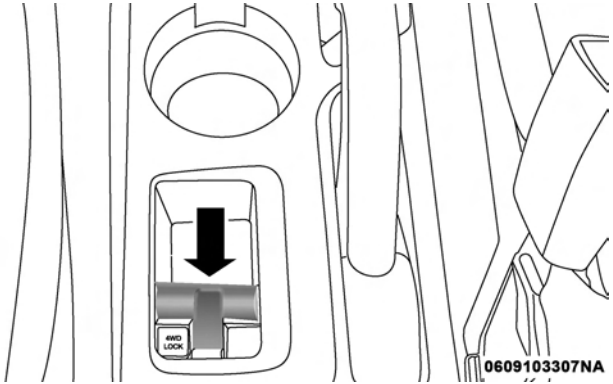

Four-Wheel Drive Switch

Where one or more wheels have wheel spin or if additional traction is needed in sand, deep snow, or loose traction surfaces, activate the "4WD LOCK" switch by pulling up once and releasing. This locks the center coupling allowing more torque to be sent to the rear wheels. The "4WD Indicator Light" will come on in the cluster. This can be done on the fly, at any vehicle speed. To deactivate, simply pull on the switch one more time. The "4WD Indicator Light" will then go out.

NOTE: Refer to "Electronic Brake Control System/ Electronic Stability Control (ESC)" in "Safety" for further information.

POWER STEERING

The standard power steering system will give you good vehicle response and increased ease of maneuverability in tight spaces. The system will provide mechanical steering capability if power assist is lost.

If for some reason the power assist is interrupted, it will still be possible to steer your vehicle. Under these conditions, you will observe a substantial increase in steering effort, especially at very low vehicle speeds and during parking maneuvers.

NOTE:

- Increased noise levels at the end of the steering wheel travel are considered normal and do not indicate that there is a problem with the power steering system.
- Upon initial start-up in cold weather, the power steering pump may make noise for a short amount of time. This is due to the cold, thick fluid in the steering system. This noise should be considered normal, and it does not in any way damage the steering system.

CAUTION!

Prolonged operation of the steering system at the end of the steering wheel travel will increase the steering fluid temperature and it should be avoided when possible. Damage to the power steering pump may occur.

Power Steering Fluid Check

Checking the power steering fluid level at a defined service interval is not required. The fluid should only be checked if a leak is suspected, abnormal noises are apparent, and/or the system is not functioning as anticipated. Coordinate inspection efforts through an authorized dealer.

CAUTION!

Do not use chemical flushes in your power steering system as the chemicals can damage your power steering components. Such damage is not covered by the New Vehicle Limited Warranty.

WARNING!

Fluid level should be checked on a level surface and with the engine off to prevent injury from moving parts and to ensure accurate fluid level reading. Do not overfill. Use only manufacturer's recommended power steering fluid.

If necessary, add fluid to restore to the proper indicated level. With a clean cloth, wipe any spilled fluid from all surfaces. Refer to "Fluids And Lubricants" in "Technical Specifications" for further information.

SPEED CONTROL — IF EQUIPPED

When engaged, the Speed Control takes over accelerator operations at speeds greater than 25 mph (40 km/h).

The Speed Control buttons are located on the right side of the steering wheel.

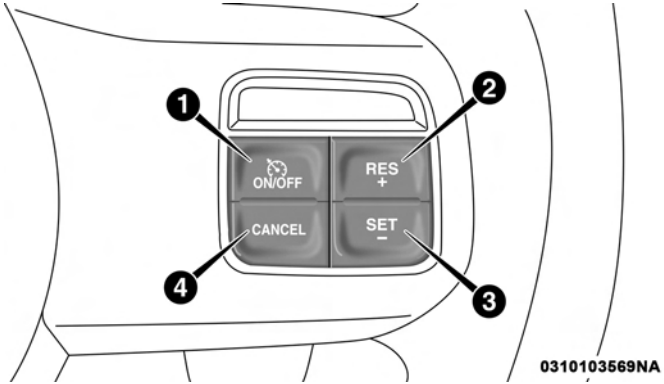

Speed Control Buttons

1 — ON/OFF	3 — SET -
2 — RES +	4 — CANCEL

NOTE: In order to ensure proper operation, the Speed Control System has been designed to shut down if multiple Speed Control functions are operated at the same time. If this occurs, the Speed Control System can be reactivated by pushing the Speed Control on/off button and resetting the desired vehicle set speed.

To Activate

Push the on/off button. The cruise control indicator light in the instrument cluster display will illuminate. To turn the system off, push the on/off button a second time. The cruise control indicator light will turn off. The system should be turned off when not in use.

WARNING!

Leaving the Speed Control system on when not in use is dangerous. You could accidentally set the system or cause it to go faster than you want. You could lose control and have an accident. Always leave the system off when you are not using it.

To Set A Desired Speed

Turn the Speed Control on. When the vehicle has reached the desired speed, push the SET (-) button and release. Release the accelerator and the vehicle will operate at the selected speed.

NOTE: The vehicle should be traveling at a steady speed and on level ground before pushing the SET (-) button.

To Deactivate

A soft tap on the brake pedal, pushing the CANC button or normal brake pressure while slowing the vehicle will deactivate the Speed Control without erasing the set speed from memory.

Pushing the on/off button or turning the ignition to the OFF position erases the set speed from memory.

To Resume Speed

To resume a previously set speed, push the RES (+) button and release. Resume can be used at any speed above 20 mph (32 km/h).

To Vary The Speed Setting

To Increase Speed

When the Speed Control is set, you can increase speed by pushing the RES (+) button.

The driver's preferred units can be selected through the instrument panel settings if equipped. Refer to "Getting To Know Your Instrument Panel" for more information. The speed increment shown is dependent on the chosen speed unit of U.S. (mph) or Metric (km/h):

U.S. Speed (mph)

- Pushing the RES (+) button once will result in a 1 mph increase in set speed. Each subsequent tap of the button results in an increase of 1 mph.
- If the button is continually pushed, the set speed will continue to increase until the button is released, then the new set speed will be established.

Metric Speed (km/h)

- Pushing the RES (+) button once will result in a 1 km/h increase in set speed. Each subsequent tap of the button results in an increase of 1 km/h.
- If the button is continually pushed, the set speed will continue to increase until the button is released, then the new set speed will be established.

To Decrease Speed

When the Speed Control is set, you can decrease speed by pushing the SET (-) button.

The driver's preferred units can be selected through the instrument panel settings if equipped. Refer to "Getting To Know Your Instrument Panel" for more information. The speed increment shown is dependent on the chosen speed unit of U.S. (mph) or Metric (km/h):

U.S. Speed (mph)

- Pushing the SET (-) button once will result in a 1 mph decrease in set speed. Each subsequent tap of the button results in a decrease of 1 mph.
- If the button is continually pushed, the set speed will continue to decrease until the button is released, then the new set speed will be established.

Metric Speed (km/h)

- Pushing the SET (-) button once will result in a 1 km/h decrease in set speed. Each subsequent tap of the button results in a decrease of 1 km/h.
- If the button is continually pushed, the set speed will continue to decrease until the button is released, then the new set speed will be established.

To Accelerate For Passing

Press the accelerator as you would normally. When the pedal is released, the vehicle will return to the set speed.

Using Speed Control On Hills

The transmission may downshift on hills to maintain the vehicle set speed.

NOTE: The Speed Control system maintains speed up and down hills. A slight speed change on moderate hills is normal.

On steep hills, a greater speed loss or gain may occur so it may be preferable to drive without Speed Control.

WARNING!

Speed Control can be dangerous where the system cannot maintain a constant speed. Your vehicle could go too fast for the conditions, and you could lose control and have an accident. Do not use Speed Control in heavy traffic or on roads that are winding, icy, snow-covered or slippery.

PARKVIEW REAR BACK UP CAMERA — IF EQUIPPED

Your vehicle may be equipped with the ParkView Rear Back Up Camera that allows you to see an on-screen image of the rear surroundings of your vehicle whenever the gear selector is put into REVERSE. The image will be displayed on the touchscreen along with a caution note to "check entire surroundings" across the top of the screen. After five seconds, this note will disappear. The ParkView camera is located on the rear of the vehicle above the rear license plate.

When the vehicle is shifted out of REVERSE, the rear camera mode is exited and the last selected touchscreen appears again.

If your vehicle is equipped with the Camera Delay feature and it is turned on, the rear camera image will be displayed for up to 10 seconds when the vehicle is shifted out of REVERSE unless the forward vehicle speed exceeds 8 mph (13 km/h), the transmission is shifted into PARK or the vehicle's ignition is cycled to the OFF position.

Static grid lines will illustrate the width of the vehicle. The static grid lines will show separate zones that will help indicate the distance to the rear of the vehicle. Different colored zones indicate the distance to the rear of the vehicle. The following table shows the approximate distances for each zone:

Zone	Distance to the rear of the vehicle
Red	0 - 1 ft (0 - 30 cm)
Yellow	1 ft - 3 ft (30 cm - 1 m)
Green	3 ft or greater (1 m or greater)

WARNING!

Drivers must be careful when backing up even when using the ParkView Rear Back Up Camera. Always check carefully behind your vehicle, and be sure to check for pedestrians, animals, other vehicles, obstructions, or blind spots before backing up. You are responsible for the safety of your surroundings and must continue to pay attention while backing up. Failure to do so can result in serious injury or death.

CAUTION!

- **To avoid vehicle damage, ParkView should only be used as a parking aid. The ParkView camera is unable to view every obstacle or object in your drive path.**

(Continued)

CAUTION! ***(Continued)***

- **To avoid vehicle damage, the vehicle must be driven slowly when using ParkView to be able to stop in time when an obstacle is seen. It is recommended that the driver look frequently over his/her shoulder when using ParkView.**

NOTE: If snow, ice, mud or any foreign substance builds up on the camera lens, clean the lens, rinse with water and dry with a soft cloth. Do not cover the lens.

ADDING FUEL

Fuel Filler Cap (Gas Cap)

The gas cap is behind the fuel filler door, on the left side of the vehicle. If the gas cap is lost or damaged, be sure the replacement cap is for use with this vehicle.

After removing the gas cap, place the gas cap tether cable over a hook on the inside of the fuel door. This keeps the gas cap suspended away from and protects the vehicle's surface.

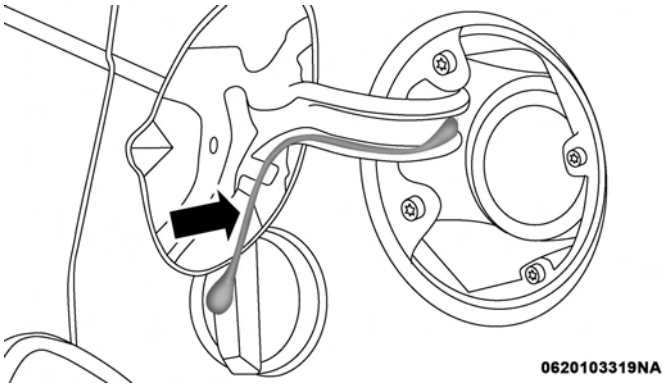

Fuel Filler Cap

CAUTION!

- **Damage to the fuel system or emission control system could result from using an improper fuel tank filler cap. A poorly fitting cap could let impurities into the fuel system.**

(Continued)

CAUTION! ***(Continued)***

- **A poorly fitting fuel filler cap may cause the "Malfunction Indicator Light (MIL)" to turn on.**
- **To avoid fuel spillage and overfilling, do not "top off" the fuel tank after filling.**

WARNING!

- **Never have any smoking materials lit in or near the vehicle when the gas cap is removed or the tank is being filled.**
- **Never add fuel when the engine is running. This is in violation of most state and federal fire regulations and may cause the MIL to turn on.**
- **A fire may result if gasoline is pumped into a portable container that is inside of a vehicle. You could be burned. Always place gas containers on the ground while filling.**

NOTE:

- When the fuel nozzle "clicks" or shuts off, the fuel tank is full.
- Tighten the gas cap about ¼ turn until you hear one click. This is an indication that cap is properly tightened.

- If the gas cap is not tightened properly, the MIL will come on. Be sure the gas cap is tightened every time the vehicle is refueled.

Loose Fuel Filler Cap Message

If the vehicle diagnostic system determines that the fuel filler cap is loose or improperly installed, a "gASCAP" message will be displayed in the Odometer/Trip Odometer in the instrument cluster. Refer to "Warning And Indicator Lights" in "Getting To Know Your Instrument Panel" for further information. Tighten the fuel filler cap properly and push the odometer/trip odometer RESET button to turn the message off. If the problem continues, the message will appear the next time the vehicle is started. Refer to "Onboard Diagnostic System" in "Getting To Know Your Instrument Panel" for further information.

VEHICLE LOADING

Certification Label

As required by National Highway Traffic Safety Administration regulations, your vehicle has a certification label affixed to the driver's side door or pillar.

This label contains the month and year of manufacture, Gross Vehicle Weight Rating (GVWR), Gross Axle Weight Rating (GAWR) front and rear, and Vehicle Identification Number (VIN). A Month-Day-Hour (MDH) number is included on this label and indicates the Month, Day and Hour of manufacture. The bar code that appears on the bottom of the label is your VIN.

Gross Vehicle Weight Rating (GVWR)

The GVWR is the total permissible weight of your vehicle including driver, passengers, vehicle, options and cargo. The label also specifies maximum capacities of front and rear axle systems (GAWR). Total load must be limited so GVWR and front and rear GAWR are not exceeded.

Payload

The payload of a vehicle is defined as the allowable load weight a truck can carry, including the weight of the driver, all passengers, options and cargo.

Gross Axle Weight Rating (GAWR)

The GAWR is the maximum permissible load on the front and rear axles. The load must be distributed in the cargo area so that the GAWR of each axle is not exceeded.

Each axle GAWR is determined by the components in the system with the lowest load carrying capacity (axle, springs, tires or wheels). Heavier axles or suspension

components sometimes specified by purchasers for increased durability does not necessarily increase the vehicle's GVWR.

Tire Size

The tire size on the Vehicle Certification Label represents the actual tire size on your vehicle. Replacement tires must be equal to the load capacity of this tire size.

Rim Size

This is the rim size that is appropriate for the tire size listed.

Inflation Pressure

This is the cold tire inflation pressure for your vehicle for all loading conditions up to full GAWR.

Curb Weight

The curb weight of a vehicle is defined as the total weight of the vehicle with all fluids, including vehicle fuel, at full capacity conditions, and with no occupants or cargo loaded into the vehicle. The front and rear curb weight values are determined by weighing your vehicle on a commercial scale before any occupants or cargo are added.

Loading

The actual total weight and the weight of the front and rear of your vehicle at the ground can best be determined by weighing it when it is loaded and ready for operation.

The entire vehicle should first be weighed on a commercial scale to insure that the GVWR has not been exceeded. The weight on the front and rear of the vehicle should then be determined separately to be sure that the load is properly distributed over the front and rear axle. Weighing the vehicle may show that the GAWR of either the front or rear axles has been exceeded but the total load is within the specified GVWR. If so, weight must be shifted from front to rear or rear to front as appropriate until the specified weight limitations are met. Store the heavier items down low and be sure that the weight is distributed equally. Stow all loose items securely before driving.

Improper weight distributions can have an adverse effect on the way your vehicle steers and handles and the way the brakes operate.

CAUTION!

Do not load your vehicle any heavier than the GVWR or the maximum front and rear GAWR. If you do, parts on your vehicle can break, or it can change the way your vehicle handles. This could cause you to lose control. Also overloading can shorten the life of your vehicle.

TRAILER TOWING

In this section you will find safety tips and information on limits to the type of towing you can reasonably do with your vehicle. Before towing a trailer, carefully review this information to tow your load as efficiently and safely as possible.

To maintain the New Vehicle Limited Warranty coverage, follow the requirements and recommendations in this manual concerning vehicles used for trailer towing.

Common Towing Definitions

The following trailer towing related definitions will assist you in understanding the following information:

Gross Vehicle Weight Rating (GVWR)

The GVWR is the total allowable weight of your vehicle. This includes driver, passengers, cargo and tongue weight. The total load must be limited so that you do not exceed the GVWR. Refer to "Vehicle Loading/Vehicle Certification Label" in "Starting And Operating" for further information.

Gross Trailer Weight (GTW)

The GTW is the weight of the trailer plus the weight of all cargo, consumables and equipment (permanent or temporary) loaded in or on the trailer in its "loaded and ready for operation" condition.

The recommended way to measure GTW is to put your fully loaded trailer on a vehicle scale. The entire weight of the trailer must be supported by the scale.

Gross Combination Weight Rating (GCWR)

The GCWR is the total allowable weight of your vehicle and trailer when weighed in combination.

Gross Axle Weight Rating (GAWR)

The GAWR is the maximum capacity of the front and rear axles. Distribute the load over the front and rear axles evenly. Make sure that you do not exceed either front or

rear GAWR. Refer to "Vehicle Loading/Vehicle Certification Label" in "Starting And Operating" for further information.

WARNING!

It is important that you do not exceed the maximum front or rear GAWR. A dangerous driving condition can result if either rating is exceeded. You could lose control of the vehicle and have a collision.

Tongue Weight (TW)

The tongue weight is the downward force exerted on the hitch ball by the trailer. You must consider this as part of the load on your vehicle.

Trailer Frontal Area

The frontal area is the maximum height multiplied by the maximum width of the front of a trailer.

Trailer Sway Control

The trailer sway control can be a mechanical telescoping link that can be installed between the hitch receiver and the trailer tongue that typically provides adjustable friction associated with the telescoping motion to dampen any unwanted trailer swaying motions while traveling.

If equipped, the electronic Trailer Sway Control (TSC) recognizes a swaying trailer and automatically applies individual wheel brakes and/or reduces engine power to attempt to eliminate the trailer sway.

Weight-Carrying Hitch

A weight-carrying hitch supports the trailer tongue weight, just as if it were luggage located at a hitch ball or some other connecting point of the vehicle. These kinds of hitches are the most popular on the market today and they are commonly used to tow small and medium sized trailers.

Weight-Distributing Hitch

A weight-distributing system works by applying leverage through spring (load) bars. They are typically used for heavier loads to distribute trailer tongue weight to the tow vehicle's front axle and the trailer axle(s). When used in accordance with the manufacturer's directions, it provides for a more level ride, offering more consistent steering and brake control thereby enhancing towing safety. The addition of a friction/hydraulic sway control also dampens sway caused by traffic and crosswinds and contributes positively to tow vehicle and trailer stability. Trailer sway control and a weight distributing (load equalizing) hitch are recommended for heavier Tongue Weights (TW) and

may be required depending on vehicle and trailer configuration/loading to comply with Gross Axle Weight Rating (GAWR) requirements.

WARNING!

- **An improperly adjusted Weight Distributing Hitch system may reduce handling, stability, braking performance, and could result in a collision.**
- **Weight Distributing Systems may not be compatible with Surge Brake Couplers. Consult with your hitch and trailer manufacturer or a reputable Recreational Vehicle dealer for additional information.**

Trailer Hitch Classification

The following chart provides the industry standard for the maximum trailer weight a given trailer hitch class can tow and should be used to assist you in selecting the correct trailer hitch for your intended towing condition.

Trailer Hitch Classification Definitions	
Class	**Max. Trailer Hitch Industry Standards**
Class I - Light Duty	2,000 lbs (907 kg)
Class II - Medium Duty	3,500 lbs (1,587 kg)
Class III - Heavy Duty	5,000 lbs (2,267 kg)
Class IV - Extra Heavy Duty	10,000 lbs (4,535 kg)
Refer to the “Trailer Towing Weights (Maximum Trailer Weight Ratings)” chart for the Maximum Gross Trailer Weight (GTW) towable for your given drivetrain.	
All trailer hitches should be professionally installed on your vehicle.	

Trailer Towing Weights (Maximum Trailer Weight Ratings)

Engine/Transmission	Frontal Area	Maximum GTW (Gross Trailer Wt.)	Maximum Tongue Wt. (See Note)
2.0L Auto/Man	22 sq ft (2.04 sq m)	1,000 lbs (453 kg)	150 lbs (68 kg)
2.4L Auto/Man	22 sq ft (2.04 sq m)	1,000 lbs (453 kg)	150 lbs (68 kg)
2.4L Auto/Man with Trailer Tow Prep Package (AHC)	32 sq ft (3.0 sq m)	2,000 lbs (907 kg)	300 lbs (136 kg)
2.4L Auto With Freedom Drive II Off Road Package (AWL)	32 sq ft (3.0 sq m)	2,000 lbs (907 kg)	300 lbs (136 kg)
Refer to local laws for maximum trailer towing speeds.			

NOTE: The trailer tongue weight must be considered as part of the combined weight of occupants and cargo, and should never exceed the weight referenced on the Tire and Loading Information placard. Refer to “Tire Safety Information” in “Servicing And Maintenance” for further information.

Trailer And Tongue Weight

Never exceed the maximum tongue weight stamped on your bumper or trailer hitch.

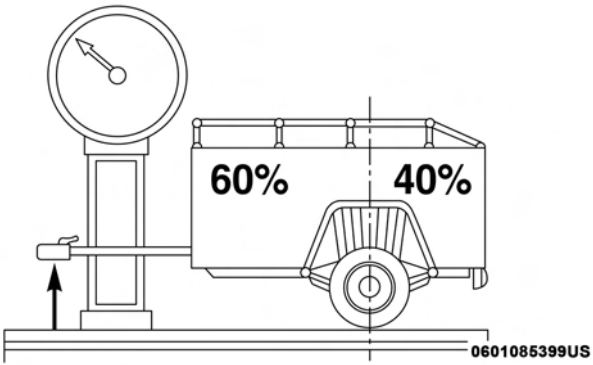

Consider the following items when computing the weight on the rear axle of the vehicle:

- The tongue weight of the trailer.
- The weight of any other type of cargo or equipment put in or on your vehicle.
- The weight of the driver and all passengers.

NOTE: Remember that everything put into or on the trailer adds to the load on your vehicle. Also, additional factory-installed options or dealer-installed options must be considered as part of the total load on your vehicle. Refer to the "Tire And Loading Information" placard for the maximum combined weight of occupants and cargo for your vehicle.

Towing Requirements

To promote proper break-in of your new vehicle drivetrain components, the following guidelines are recommended:

WARNING!

Improper towing can lead to a collision. Follow these guidelines to make your trailer towing as safe as possible:

- **Make certain that the load is secured in the trailer and that it will not shift during travel. When trailering cargo that is not fully secured, dynamic load shifts can occur that may be difficult for the driver to control. You could lose control of your vehicle and have a collision.**

(Continued)

WARNING! *(Continued)*

- **When hauling cargo, or towing a trailer, do not overload your vehicle or trailer. Overloading can cause a loss of control, poor performance, or damage to brakes, axle, engine, transmission, steering, suspension, chassis structure, or tires.**
- **Safety chains must always be used between your vehicle and trailer. Always connect the chains to the frame or hook retainers of the vehicle hitch. Cross the chains under the trailer tongue and allow enough slack for turning corners.**
- **Vehicles with trailers should not be parked on a grade. When parking, apply the parking brake on the tow vehicle. Put the tow vehicle transmission in PARK. Always block or "chock" the trailer wheels.**
- **GCWR must not be exceeded.**
- **Total weight must be distributed between the tow vehicle and the trailer such that the following four ratings are not exceeded:**

  1. **GVWR**
  2. **GTW**
  3. **GAWR**
  4. **Tongue weight rating for the trailer hitch utilized.**

CAUTION!

- **Do not tow a trailer at all during the first 500 miles (805 km) the new vehicle is driven. The engine, axle or other parts could be damaged.**
- **Then, during the first 500 miles (805 km) that a trailer is towed, do not drive over 50 mph (80 km/h) and do not make starts at full throttle. This helps the engine and other parts of the vehicle wear in at the heavier loads.**

Towing Requirements — Tires

- Do not attempt to tow a trailer while using a compact spare tire.
- Proper tire inflation pressures are essential to the safe and satisfactory operation of your vehicle. Refer to "Tires" in "Servicing And Maintenance" for proper tire inflation procedures.
- Check the trailer tires for proper tire inflation pressures before trailer usage.
- Check for signs of tire wear or visible tire damage before towing a trailer. Refer to "Tires" in "Servicing And Maintenance" for the proper inspection procedure.

- When replacing tires, refer to "Tires" in "Servicing And Maintenance" for the proper tire replacement procedures. Replacing tires with a higher load carrying capacity will not increase the vehicle's GVWR and GAWR limits.

Towing Requirements — Trailer Brakes

- Do **not** interconnect the hydraulic brake system or vacuum system of your vehicle with that of the trailer. This could cause inadequate braking and possible personal injury.
- An electronically actuated trailer brake controller is required when towing a trailer with electronically actuated brakes. When towing a trailer equipped with a hydraulic surge actuated brake system, an electronic brake controller is not required.
- Trailer brakes are recommended for trailers over 1,000 lbs (453 kg) and required for trailers in excess of 2,000 lbs (907 kg).

WARNING!

- **Do not connect trailer brakes to your vehicle's hydraulic brake lines. It can overload your brake system and cause it to fail. You might not have brakes when you need them and could have a collision.**
- **Towing any trailer will increase your stopping distance. When towing you should allow for additional space between your vehicle and the vehicle in front of you. Failure to do so could result in a collision.**

CAUTION!

If the trailer weighs more than 1,000 lbs (453 kg) loaded, it should have its own brakes and they should be of adequate capacity. Failure to do this could lead to accelerated brake lining wear, higher brake pedal effort, and longer stopping distances.

Towing Requirements — Trailer Lights And Wiring

Whenever you pull a trailer, regardless of the trailer size, stoplights and turn signals on the trailer are required for motoring safety.

The Trailer Tow Package may include a four- and seven-pin wiring harness. Use a factory approved trailer harness and connector.

NOTE: Do not cut or splice wiring into the vehicle's wiring harness.

The electrical connections are all complete to the vehicle but you must mate the harness to a trailer connector. Refer to the following illustrations.

NOTE:

- Disconnect trailer wiring connector from the vehicle before launching a boat (or any other device plugged into vehicle's electrical connect) into water.
- Be sure to reconnect after clear from water area.

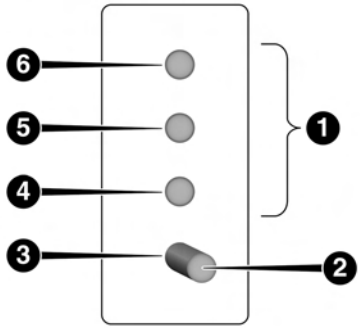

0601085400US

Four-Pin Connector

1 — Female Pins	4 — Park
2 — Male Pin	5 — Left Stop/Turn
3 — Ground	6 — Right Stop/Turn

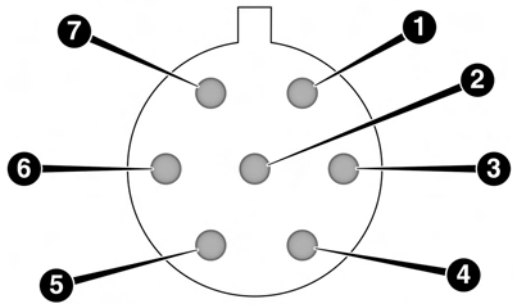

0601085401US

Seven-Pin Connector

1 — Battery	5 — Ground
2 — Backup Lamps	6 — Left Stop/Turn
3 — Right Stop/Turn	7 — Running Lamps
4 — Electric Brakes	

Towing Tips

Before setting out on a trip, practice turning, stopping, and backing up the trailer in an area located away from heavy traffic.

Manual Transmission — If Equipped

If using a manual transmission vehicle for trailer towing, all starts must be in first gear to avoid excessive clutch slippage.

Automatic Transmission — If Equipped

The DRIVE range can be selected when towing. However, if frequent shifting or changes in engine speed occur while in this range, use the AutoStick shift control (if equipped) to select a lower gear ratio.

NOTE:

- Using a lower gear ratio while operating the vehicle under heavy loading conditions, will improve performance and extend transmission life by reducing excessive shifting and heat buildup. This action will also provide better engine braking.
- If you REGULARLY tow a trailer for more than 45 minutes of continuous operation, then change the transmission fluid and filter as specified for "police, taxi, fleet, or frequent trailer towing". Refer to the "Maintenance Plan" for the proper maintenance intervals.

AutoStick — If Equipped

When using the AutoStick shift control, select the highest gear that allows for adequate performance and avoids frequent downshifts. For example, choose ″4″ if the desired speed can be maintained. Choose ″3″ or ″2″ if needed to maintain the desired speed.

To prevent excess heat generation, avoid continuous driving at high RPM. Reduce vehicle speed as necessary to avoid extended driving at high RPM. Return to a higher gear or vehicle speed when grade and road conditions allow.

Electronic Speed Control — If Equipped

- Do not use in hilly terrain or with heavy loads.
- When using the speed control, if you experience speed drops greater than 10 mph (16 km/h), disengage until you can get back to cruising speed.
- Use speed control in flat terrain and with light loads to maximize fuel efficiency.

Cooling System

To reduce potential for engine and transmission overheating, take the following actions:

City Driving

When stopped for short periods, shift the transmission into NEUTRAL and increase engine idle speed.

Highway Driving

Reduce speed.

Air Conditioning

Turn off temporarily.

RECREATIONAL TOWING (BEHIND MOTORHOME, ETC.)

Towing This Vehicle Behind Another Vehicle

Towing Condition	Wheels OFF the Ground	Manual Transmission	Automatic Transmission
Flat Tow	None	• Transmission in NEUTRAL • Key in ACC Position	NOT ALLOWED
Dolly Tow	Front	FWD Models ONLY	FWD Models ONLY
	Rear	NOT ALLOWED	NOT ALLOWED
On Trailer	All	OK	OK

NOTE:

- When recreational towing your vehicle, always follow applicable state and provincial laws. Contact state and provincial Highway Safety offices for additional details.
- Vehicles equipped with **manual transmissions** may be recreational towed (flat towed) at any legal highway speed, for any distance, if the **manual transmission** is in NEUTRAL and the ignition key is in the ACC position.

CAUTION!

- **DO NOT flat tow any vehicle equipped with an automatic transmission. Damage to the drivetrain will result. If these vehicles require towing, make sure all drive wheels are OFF the ground.**
- **DO NOT dolly tow any 4WD vehicle. Internal damage to the transmission or transfer case will occur if a dolly is used when recreational towing.**

DRIVING TIPS

On-Road Driving Tips

Utility vehicles have higher ground clearance and a narrower track to make them capable of performing in a wide variety of off-road applications. Specific design characteristics give them a higher center of gravity than conventional passenger cars.

An advantage of the higher ground clearance is a better view of the road, allowing you to anticipate problems. They are not designed for cornering at the same speeds as conventional passenger cars any more than low-slung sports cars are designed to perform satisfactorily in off-road conditions. Avoid sharp turns or abrupt maneuvers. As with other vehicles of this type, failure to operate this vehicle correctly may result in loss of control or vehicle rollover.

Off-Road Driving Tips

You will encounter many types of terrain driving off-road. You should be familiar with the terrain and area before proceeding. There are many types of surface conditions: hard packed dirt, gravel, rocks, grass, sand, mud, snow and ice. Every surface has a different effect on your vehicle's steering, handling and traction. Controlling your vehicle is one of the keys to successful off-road driving, so always keep a firm grip on the steering wheel and maintain a good driving posture. Avoid sudden accelerations, turns or braking. In most cases there are no road signs, posted speed limits or signal lights. Therefore you will need to use your own good judgment on what is safe and what is not. When on a trail, you should always be looking ahead for surface obstacles and changes in terrain. The key is to plan your future driving route while remembering what you are currently driving over.

CAUTION!

Never park your vehicle over dry grass or other combustible materials. The heat from your vehicle exhaust system could cause a fire.

WARNING!

Always wear your seat belt and firmly tie down cargo. Unsecured cargo can become projectiles in an off-road situation.

When To Use Low (L Off-Road) With The 4WD Lock Lever Engaged — If Equipped

When driving off-road, shift into low (L Off-Road [if equipped]) and activate the 4WD LOCK. This will provide additional traction and activates the numerous off-road features to improve handling and control on slippery or difficult terrain. Due to the sustained lower gearing, low (L Off-Road [if equipped]) with 4WD LOCK engaged will allow the engine to operate in a higher power range. This will allow you to cross over obstacles and descend hills, with improved control and less effort.

NOTE: For maximum off-road performance, premium fuel is recommended. While the vehicle will operate on regular fuel when in L Off-Road mode (if equipped), the engine has been calibrated for maximum performance using premium fuel.

Driving In Snow, Mud And Sand

There is a drastic reduction in traction when driving in snow, mud or sand. The vehicle will be less responsive to steering, acceleration and braking inputs. Therefore, you should accelerate slowly, leave greater stopping distances and avoid abrupt vehicle maneuvers. You want to keep a slow constant steady pace. The key is to maintain the vehicle's momentum.

Snow

In heavy snow or for additional control and traction at slower speeds, activate the 4WD LOCK and shift the transaxle to low (L Off-Road [if equipped]) if necessary. Do not shift to a lower gear than necessary to maintain headway. Over-revving the engine can spin the wheels and traction will be lost. If you start to slow to a stop, try turning your steering wheel no more than a 1/4 turn quickly back and forth, while still applying throttle. This will allow the tires to get a fresh "bite" and help maintain your momentum.

CAUTION!

On icy or slippery roads, do not downshift at high engine RPM's or vehicle speeds because engine braking may cause skidding and loss of control.

Mud

Deep mud creates a great deal of suction around the tires and is very difficult to get through. You should use low (L Off-Road [if equipped]) with the 4WD LOCK engaged and maintain your momentum. If you start to slow to a stop, try turning your steering wheel no more than a 1/4 turn quickly back and forth for additional traction. Mud holes

pose an increased threat of vehicle damage and getting stuck. They are normally full of debris from previous vehicles getting stuck. As a good practice before entering any mud hole, get out and determine how deep it is, if there are any hidden obstacles and if the vehicle can be safely recovered if stuck.

Sand

Soft sand is very difficult to travel through with full tire pressure. When crossing soft sandy spots in a trail maintain your vehicle's momentum and do not stop. The key to driving in soft sand is using the appropriate tire pressure, accelerating slowly, avoiding abrupt maneuvers and maintaining the vehicle's momentum. If you are going to be driving on large soft sandy areas or dunes, reduce your tire pressure to a minimum of 15 psi (103 kPa) to allow for a greater tire surface area. You should use low (L Off-Road [if equipped]) with the 4WD LOCK engaged and ESC turned off. Reduced tire pressure will drastically improve your traction and handling, while driving on the soft sand, but you must return the tires to normal air pressure before driving on pavement or other hard surfaces. Be sure you have a way to reinflate the tires prior to reducing the pressure.

CAUTION!

Reduced tire pressures may cause tire unseating and total loss of air pressure. To reduce the risk of tire unseating, while at a reduced tire pressure, reduce your speed and avoid sharp turns or abrupt maneuvers.

Hill Climbing

Hill climbing requires good judgment and a good understanding of your abilities and your vehicle's limitations. Hills can cause serious problems. Some are just too steep to climb and should not be attempted. You should always feel confident with the vehicle and your abilities. You should always climb hills straight up and down. Never attempt to climb a hill on an angle.

Before Climbing A Steep Hill

As you approach a hill consider its grade or steepness. Determine if it is too steep. Look to see what the traction is on the hill side trail. Is the trail straight up and down? What is on top and the other side? Are there ruts, rocks, branches or other obstacles on the path? Can you safely recover the vehicle if something goes wrong? If everything looks good and you feel confident, then you should use

low (L Off-Road [if equipped]) with the 4WD LOCK engaged and proceed with caution maintaining your momentum as you climb the hill.

Driving Up Hill

Once you have determined your ability to proceed and have shifted into the appropriate gear, line your vehicle up for the straightest possible run. Accelerate with an easy constant throttle and apply more power as you start up the hill. Do not race forward into a steep grade; the abrupt change of grade could cause you to lose control. If the front end begins to bounce, ease off the throttle slightly to bring all four tires back on the ground. As you approach the crest of the hill, ease off the throttle and slowly proceed over the top. If the wheels start to slip as you approach the crest of a hill, ease off the accelerator and maintain headway by turning the steering wheel no more than a 1/4 turn quickly back and forth. This will provide a fresh "bite" into the surface and will usually provide enough traction to complete the climb. If you do not make it to the top, place the vehicle in REVERSE and back straight down the grade using engine resistance along with the vehicle brakes.

WARNING!

Never attempt to climb a hill at an angle or turn around on a steep grade. Driving across an incline increases the risk of a rollover, which may result in severe injury.

Driving Down Hill

Before driving down a steep hill you need to determine if it is too steep for a safe descent. What is the surface traction? Is the grade too steep to maintain a slow controlled descent? Are there obstacles? Is it a straight descent? Is there plenty of distance at the base of the hill to regain control if the vehicle descends to fast? If you feel confident in your ability to proceed then make sure you are in low (L Off-Road [if equipped]) with the 4WD LOCK engaged and proceed with caution. Allow engine and hill descent braking to control the descent and apply your brakes if necessary, but do not allow the tires to lock.

WARNING!

Do not descend a steep grade in NEUTRAL. Use vehicle brakes in conjunction with engine braking. Descending a grade too fast could cause you to lose control and be seriously injured or killed.

Driving Across An Incline

If at all possible avoid driving across an incline. If it is necessary, know your vehicle's abilities. Driving across an incline places more weight on the down-hill wheels, which increases the possibilities of a down-hill slide or rollover. Make sure the surface has good traction with firm and stable soils. If possible transverse the incline at an angle heading slightly up or down.

WARNING!

Driving across an incline increases the risk of a rollover, which may result in severe injury.

If You Stall Or Begin To Lose Headway

If you stall or begin to lose headway while climbing a steep hill, allow your vehicle to come to a stop and immediately apply the brake. Restart the engine and shift to REVERSE. Back slowly down the hill allowing engine and hill descent braking to control the descent and apply your brakes if necessary, but do not allow the tires to lock.

WARNING!

If the engine stalls or you lose headway or cannot make it to the top of a steep hill or grade, never attempt to turn around. To do so may result in tipping and rolling the vehicle, which may result in severe injury. Always back carefully straight down a hill in REVERSE gear. Never back down a hill in NEUTRAL using only the vehicle brakes. Never drive diagonally across a hill, always drive straight up or down.

Driving Through Water

Extreme care should be taken crossing any type of water. Water crossings should be avoided if possible, and only be attempted when necessary in a safe responsible manner. You should only drive through areas which are designated and approved. You should tread lightly and avoid damage to the environment. You should know your vehicles abilities and be able to recover it if something goes wrong. You should never stop or shut a vehicle off when crossing deep water unless you ingested water into the engine air intake. If the engine stalls, do not attempt to restart it. Determine if it has ingested water first. The key to any crossing is low and slow. You want to use low (L Off-Road [if equipped]) with the 4WD LOCK engaged and proceed very slowly

with a constant slow speed (3-5 mph [5–8 km/h] maximum) and light throttle. Keep the vehicle moving; do not try to accelerate through the crossing. After crossing any water higher than the bottom of the axle differentials, you should inspect all of the vehicle fluids for signs of water ingestion.

CAUTION!

Water ingestion into the transaxle, transfer case, engine or vehicle interior can occur if you drive too fast or through too deep of water. Water can cause permanent damage to engine, driveline or other vehicle components and your brakes will be less effective once wet and/or muddy.

Before You Cross Any Type Of Water

As you approach any type of water, you need to determine if you can cross it safely and responsibly. If necessary, get out and walk through the water or probe it with a stick. You need to be sure of its depth, approach angle, current and bottom condition. Be careful of murky or muddy waters; check for hidden obstacles. Make sure you will not be intruding on any wildlife, and you can recover the vehicle if necessary. The key to a safe crossing is the water depth, current and bottom conditions. On soft bottoms, the vehicle will sink in, effectively increasing the water level on the vehicle. Be sure to consider this when determining the depth and the ability to safely cross.

Crossing Puddles, Pools, Flooded Areas Or Other Standing Water

Puddles, pools, flooded or other standing water areas normally contain murky or muddy waters. These water types normally contain hidden obstacles and make it difficult to determine an accurate water depth, approach angle, and bottom condition. Murky or muddy water holes are where you want to hook up tow straps prior to entering. This makes for a faster, cleaner and easier vehicle recovery. If you are able to determine you can safely cross, than proceed using the low and slow method.

CAUTION!

Muddy waters can reduce the cooling system effectiveness by depositing debris onto the radiator.

After Driving Off-Road

Off-road operation puts more stress on your vehicle than does most on-road driving. After going off-road, it is always a good idea to check for damage. That way you can get any problems taken care of right away and have your vehicle ready when you need it.

- Completely inspect the underbody of your vehicle. Check tires, body structure, steering, suspension, and exhaust system for damage.
- Inspect the radiator for mud and debris and clean as required.
- Check threaded fasteners for looseness, particularly on the chassis, drivetrain components, steering, and suspension. Retighten them, if required, and torque to the values specified in the Service Manual.
- Check for accumulations of plants or brush. These things could be a fire hazard. They might hide damage to fuel lines, brake hoses, axle pinion seals, and propeller shafts.
- After extended operation in mud, sand, water, or similar dirty conditions, have the radiator, fan, brake rotors, wheels, brake linings, and axle yokes inspected and cleaned as soon as possible.

WARNING!

Abrasive material in any part of the brakes may cause excessive wear or unpredictable braking. You might not have full braking power when you need it to prevent a collision. If you have been operating your vehicle in dirty conditions, get your brakes checked and cleaned as necessary.

- If you experience unusual vibration after driving in mud, slush or similar conditions, check the wheels for impacted material. Impacted material can cause a wheel imbalance and freeing the wheels of it will correct the situation.

IN CASE OF EMERGENCY

CONTENTS

■ HAZARD WARNING FLASHERS 247
■ BULB REPLACEMENT 247
□ Replacement Bulbs 247
□ Replacing Exterior Bulbs. 248
□ Headlamps 248
□ Fog Lamps 248
□ Rear Tail, Turn Signal And Backup Lamps 249
□ License Lamps 249
□ Center High-Mounted Stoplamp 249
■ FUSES 249
□ Integrated Power Module (IPM) 250
■ JACKING AND TIRE CHANGING 253
□ Jack Location 254
□ Spare Tire Stowage 254
□ Preparations For Jacking 254
□ Jacking Instructions 255
□ Road Tire Installation 260
■ TIRE SERVICE KIT — IF EQUIPPED 262
□ Tire Service Kit Storage. 262
□ Tire Service Kit Components And Operation . . .262
□ Tire Service Kit Usage Precautions 263
□ Sealing A Tire With Tire Service Kit 265
■ JUMP-STARTING PROCEDURES 269
□ Preparations For Jump-Start 270
□ Jump-Starting Procedure. 271
■ IF YOUR ENGINE OVERHEATS 273
■ GEAR SELECTOR OVERRIDE 274
■ FREEING A STUCK VEHICLE 274

■ TOWING A DISABLED VEHICLE 276

□ With Ignition Key. 277

■ ENHANCED ACCIDENT RESPONSE SYSTEM (EARS) 278

■ EVENT DATA RECORDER (EDR) 278

HAZARD WARNING FLASHERS

The Hazard Warning flasher switch is located on the instrument panel below the climate controls.

Push the switch to turn on the Hazard Warning flasher. When the switch is activated, all directional turn signals will flash on and off to warn oncoming traffic of an emergency. Push the switch a second time to turn off the Hazard Warning flashers.

This is an emergency warning system and it should not be used when the vehicle is in motion. Use it when your vehicle is disabled and it is creating a safety hazard for other motorists.

When you must leave the vehicle to seek assistance, the Hazard Warning flashers will continue to operate even though the ignition is placed in the OFF position.

NOTE: With extended use, the Hazard Warning flashers may wear down your battery.

BULB REPLACEMENT

Replacement Bulbs

All the inside bulbs are brass or glass wedge base. Aluminum base bulbs are not approved and should not be used for replacement

Interior Bulbs

	Bulb Number
Front Header Lamp	T578
Center Dome Lamp	T578
Rear Cargo Lamp/Flashlight	8–A35LF

Exterior Bulbs

	Bulb Number
Low Beam/High Beam Headlamp	H13
Front Park/Turn Signal/Side Marker Lamp	3757KA
Front Fog Lamp	PSX24W
Center High Mounted Stop Lamp (CHMSL)	LED Assembly (Serviced At Authorized Dealer)
Rear Tail/Turn/Stop Lamp	3157
Backup Lamp	W16W (921)
License Lamp	W5W

Replacing Exterior Bulbs

Headlamps

1. Raise the hood and locate the connector behind the headlamp.
2. Reach into engine compartment and pull red lock out at connector.
3. Remove the green connector from the back of the bulb by pulling straight back.
4. Twist the bulb to the left.
5. Pull bulb outward from assembly.

NOTE: These are halogen bulbs. Take care not to touch the bulb with your fingers. Body oils from your fingers could cause excessive heat buildup which reduces bulb life.

Fog Lamps

1. Access lamp through the lower fascia cutout.
2. Remove electrical connector from bulb.
3. Remove bulb from housing.

CAUTION!

Do not touch the new bulb with your fingers. Oil contamination will severely shorten bulb life. If the bulb comes in contact with any oily surface, clean the bulb with rubbing alcohol.

Rear Tail, Turn Signal And Backup Lamps

1. Raise the liftgate.
2. Remove the two push-pins from the taillamp housing.
3. Grasp the taillamp and pull firmly to disengage the light from the aperture panel.
4. Twist and remove socket from the light.
5. Remove bulb from socket and replace.

License Lamps

1. Use a screw driver to gently pry against the side of the snap tab to remove the lamp from the liftgate.
2. Rotate the socket 1/4 turn counterclockwise.
3. Pull the bulb from the socket.

Center High-Mounted Stoplamp

This light is an LED assembly. See your authorized dealer for replacement.

FUSES

WARNING!

- **When replacing a blown fuse, always use an appropriate replacement fuse with the same amp rating as the original fuse. Never replace a fuse with another fuse of higher amp rating. Never replace a blown fuse with metal wires or any other material. Failure to use proper fuses may result in serious personal injury, fire and/or property damage.**
- **Before replacing a fuse, make sure that the ignition is off and that all the other services are switched off and/or disengaged.**
- **If the replaced fuse blows again, contact an authorized dealer.**
- **If a general protection fuse for safety systems (air bag system, braking system), power unit systems (engine system, transmission system) or steering system blows, contact an authorized dealer.**

Integrated Power Module (IPM)

The Integrated Power Module is located in the engine compartment near the air cleaner assembly. This center contains cartridge fuses and mini-fuses. A label that identifies each component may be printed on the inside of the cover. Refer to “Engine Compartment” in “Servicing And Maintenance” for further information.

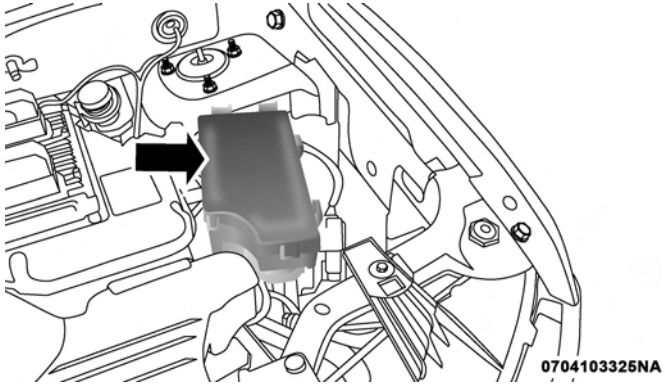

Integrated Power Module

Cavity	Cartridge Fuse	Mini-Fuse	Description
1	20 Amp Blue	–	Trailer Tow – If Equipped
2	–	15 Amp Lt Blue	AWD/4WD Control Module – If Equipped
3	–	10 Amp Red	Rear Center Brake Light Switch
4	–	10 Amp Red	Ignition Switch/Clock Spring
5	–	15 Amp Lt Blue	Battery Feed For Power Tech

Cavity	Cartridge Fuse	Mini-Fuse	Description
6	–	10 Amp Red	Power Mirror/Steering Control Satellite Radio/ Hands-Free Phone
7	–	30 Amp Green	Ignition Off Draw
8	–	30 Amp Green	Ignition Off Draw
9	40 Amp Green	–	Power Seats
10	–	20 Amp Yellow	Power Locks/Interior Lighting
11	–	15 Amp Lt Blue	Power Outlet
12	–	20 Amp Yellow	115V AC Inverter – If Equipped
13	–	20 Amp Yellow	Cigar Lighter
14	–	10 Amp Red	Instrument Cluster
15	40 Amp Green	–	Radiator Fan
16	–	15 Amp Lt Blue	Dome Lamp/Sunroof/Rear Wiper Motor
17	–	10 Amp Red	Wireless Control Module
18	40 Amp Green	–	Auto Shutdown Relay
19	–	20 Amp Yellow	Radio Amplifiers
20	–	15 Amp Lt Blue	Radio

Cavity	Cartridge Fuse	Mini-Fuse	Description
21	–	10 Amp Red	Intrusion Module/Siren – If Equipped
22	–	10 Amp Red	Heating, AC/Compass
23	–	15 Amp Lt Blue	Auto Shutdown Relay
24	–	15 Amp Lt Blue	Power Sunroof – If Equipped
25	–	10 Amp Red	Heated Mirror – If Equipped
26	–	15 Amp Lt Blue	Auto Shutdown Relay
27	–	10 Amp Red	Airbag Control Module
28	–	10 Amp Red	Airbag Control Module/ Occupant Classification Module
29	–	–	Hot Vehicle (No Fuse Required)
30	–	20 Amp Yellow	Heated Seat – If Equipped
31	–	10 Amp Red	Headlamp Washer – If Equipped
32	30 Amp Pink	–	Auto Shutdown Relay
33	–	10 Amp Red	J1962 Conn/Powertrain Control Module

Cavity	Cartridge Fuse	Mini-Fuse	Description
34	30 Amp Pink	–	Antilock BrakeValve
35	40 Amp Green	–	Antilock Brake Pump
36	30 Amp Pink	–	Headlamp/Washer Control/Smart Glass – If Equipped
37	–	25 Amp Clear	Diesel Heater and H2/MOD power top

CAUTION!

- **When installing the IPM cover, it is important to ensure the cover is properly positioned and fully latched. Failure to do so may allow water to get into the IPM, and possibly result in an electrical system failure.**
- **When replacing a blown fuse, it is important to use only a fuse having the correct amperage rating. The use of a fuse with a rating other than indicated may result in a dangerous electrical system overload. If a properly rated fuse continues to blow, it indicates a problem in the circuit that must be corrected.**

JACKING AND TIRE CHANGING

WARNING!

- **Do not attempt to change a tire on the side of the vehicle close to moving traffic. Pull far enough off the road to avoid the danger of being hit when operating the jack or changing the wheel.**
- **Being under a jacked-up vehicle is dangerous. The vehicle could slip off the jack and fall on you. You could be crushed. Never put any part of your body under a vehicle that is on a jack. If you need to get under a raised vehicle, take it to a service center where it can be raised on a lift.**

(Continued)

WARNING! ***(Continued)***

- **Never start or run the engine while the vehicle is on a jack.**
- **The jack is designed to be used as a tool for changing tires only. The jack should not be used to lift the vehicle for service purposes. The vehicle should be jacked on a firm level surface only. Avoid ice or slippery areas.**

Jack Location

The jack and jack-handle are stowed under the load floor in the cargo area.

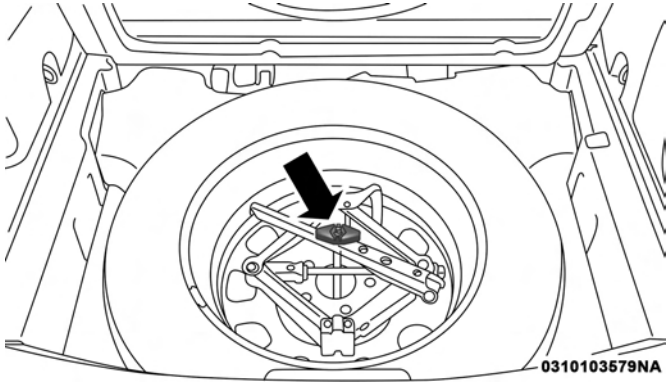

Spare Tire And Jack Stowage

Spare Tire Stowage

The compact spare tire is stowed under the rear load floor in the cargo area.

Spare Tire Removal

Lift up the load floor cover and remove the hold down.

Preparations For Jacking

1. Park the vehicle on a firm level surface, avoiding ice or slippery areas.

WARNING!

Do not attempt to change a tire on the side of the vehicle close to moving traffic, pull far enough off the road to avoid the danger of being hit when operating the jack or changing the wheel.

2. Turn on the Hazard Warning flasher.
3. Set the parking brake.
4. Place the gear selector in PARK (automatic transmission) or REVERSE (manual transmission).
5. Turn OFF the ignition.
6. Block both the front and rear of the wheel diagonally opposite of the jacking position. For example, if changing the right front tire, block the left rear wheel.

NOTE: Passengers should not remain in the vehicle while the vehicle is being jacked.

Jacking Instructions

WARNING!

Carefully follow these tire changing warnings to help prevent personal injury or damage to your vehicle:

- **Always park on a firm, level surface as far from the edge of the roadway as possible before raising the vehicle.**
- **Turn on the Hazard Warning flasher.**
- **Block the wheel diagonally opposite the wheel to be raised.**
- **Set the parking brake firmly and set an automatic transmission in PARK; a manual transmission in REVERSE.**
- **Never start or run the engine with the vehicle on a jack.**
- **Do not let anyone sit in the vehicle when it is on a jack.**
- **Do not get under the vehicle when it is on a jack. If you need to get under a raised vehicle, take it to a service center where it can be raised on a lift.**
- **Only use the jack in the positions indicated and for lifting this vehicle during a tire change.**

(Continued)

WARNING! ***(Continued)***

- **If working on or near a roadway, be extremely careful of motor traffic.**
- **To assure that spare tires, flat or inflated, are securely stowed, spares must be stowed with the valve stem facing the ground.**

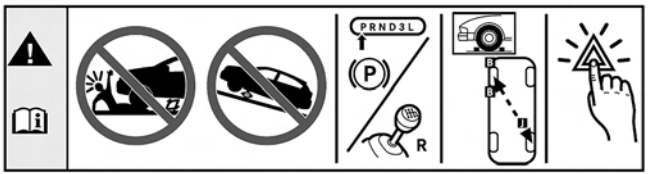

060600714

Jack Warning Label

NOTE: Refer to "Tires" in "Servicing And Maintenance" for further information about the spare tire, it's use, and operation.

1. Remove the scissors jack and lug wrench from the spare wheel as an assembly. Turn the jack screw to the left to loosen the lug wrench and remove the wrench from the jack assembly.

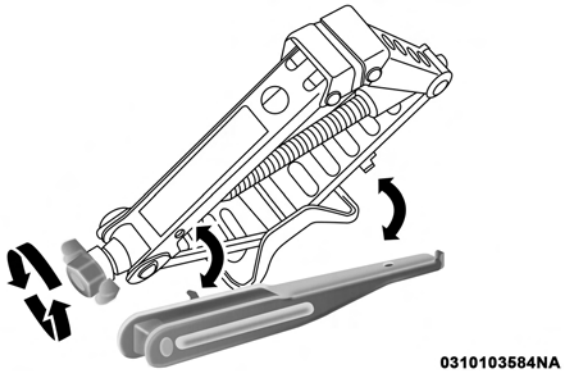

0310103584NA

Removing Jack Handle From Jack

NOTE: The jack handle attaches to the side of the jack with two attachment points. When the jack is partially expanded, the tension between the two attachment points holds the jack handle in place.

2. Loosen, but do not remove, the wheel nuts by turning them to the left one turn while the wheel is still on the ground.

NOTE: There are front and rear jacking locations on each side of the body. The front locations are outlined by two triangular cutouts on one of the flanges in the sill flange assembly. The rear location is the same but with two rectangular cutouts. For vehicles equipped with plastic trim, the plastic has been cut away to expose the jacking locations in the body.

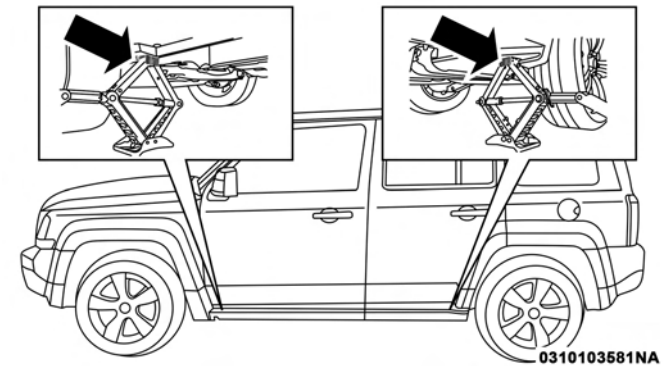

Jacking Locations

CAUTION!

Do not attempt to raise the vehicle by jacking on locations other than those indicated in the Jacking Instructions for this vehicle.

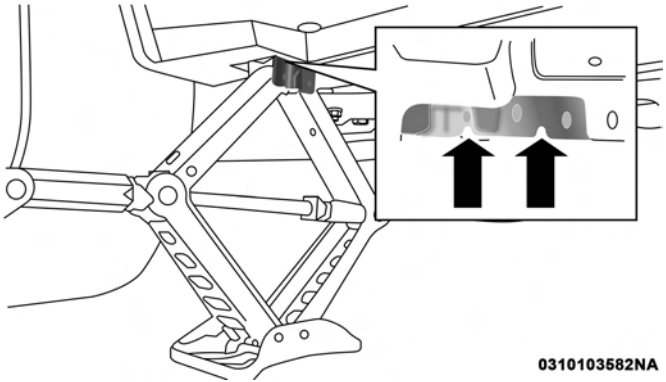

Front Jacking Location

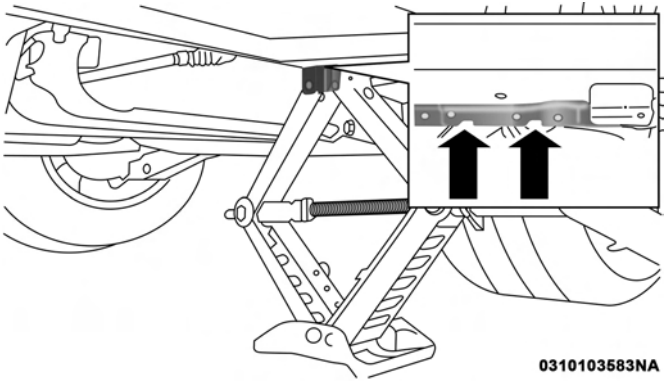

Rear Jacking Location

Do not raise the vehicle until you are sure the jack is securely engaged.

3. Turn the jack screw to the left until the jack can be placed under the jacking location. Once the jack is positioned, turn the jack screw to the right until the jack head is properly engaged with the lift area closest to the wheel to be changed.

WARNING!

Raising the vehicle higher than necessary can make the vehicle less stable. It could slip off the jack and hurt someone near it. Raise the vehicle only enough to remove the tire.

4. Using the swivel wrench raise the vehicle by turning the jack screw to the right. Raise the vehicle only until the tire just clears the surface and enough clearance is obtained to install the spare tire. Minimum tire lift provides maximum stability.

5. Remove the wheel nuts and pull the wheel and wheel covers, where applicable, off the hub. Install the spare wheel and wheel nuts with the cone shaped end of the nuts toward the wheel. Lightly tighten the nuts.

WARNING!

To avoid the risk of forcing the vehicle off the jack, do not tighten the wheel nuts fully until the vehicle has been lowered. Failure to follow this warning may result in serious injury.

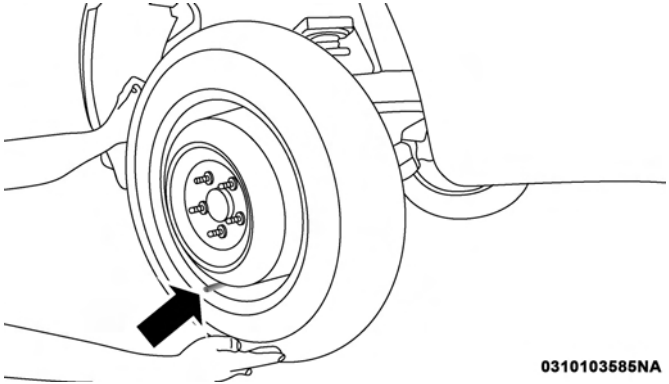

Mounting Spare Tire

WARNING!

To avoid possible personal injury, handle the wheel covers with care to avoid contact with any sharp edges.

CAUTION!

Be sure to mount the spare tire with the valve stem facing outward. The vehicle could be damaged if the spare tire is mounted incorrectly.

NOTE: The wheel cover is held on the wheel by the wheel nuts. When reinstalling the original wheel, properly align the wheel cover to the valve stem, place the wheel cover onto the wheel, then install the wheel nuts.

6. Lower the vehicle by turning the jack screw to the left.
7. Finish tightening the lug nuts. Push down on the wrench while at the end of the handle for increased leverage. Tighten the lug nuts in a star pattern until each nut has been tightened twice. Refer to "Torque Specifications" in "Technical Specifications" for the correct lug nut torque. If you doubt that you have tightened the nuts correctly, have them checked with a torque wrench by your authorized dealer or service station.
8. Remove the wheel blocks and lower the jack until it is free. Release the parking brake. Reassemble the lug wrench to the jack assembly and stow it in the spare tire area. Secure the assembly using the means provided.

WARNING!

A loose tire or jack thrown forward in a collision or hard stop could endanger the occupants of the vehicle. Always stow the jack parts and the spare tire in the places provided.

9. Place the deflated (flat) tire in the cargo area, **have the tire repaired or replaced as soon as possible.**

WARNING!

A loose tire thrown forward in a collision or hard stop could injure the occupants in the vehicle. Have the deflated (flat) tire repaired or replaced immediately.

10. Check the spare tire pressure as soon as possible. Correct the tire pressure as required.

Road Tire Installation

Vehicles Equipped With Wheel Covers

1. Mount the road tire on the axle.
2. Align the valve notch in the wheel cover with the valve stem on the wheel. Install the cover by hand. Do not use a hammer or excessive force to install the cover.

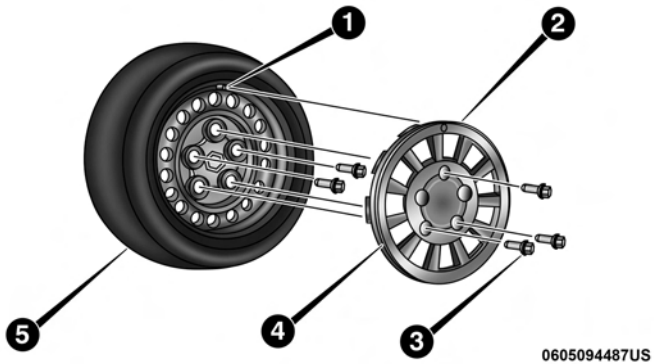

Tire And Wheel Cover Or Center Cap

1 — Valve Stem
2 — Valve Notch
3 — Wheel Lug Nut
4 — Wheel Cover
5 — Road Wheel

3. Install the five wheel lug nuts with the cone shaped end of the nut toward the wheel. Lightly tighten the lug nuts.

WARNING!

To avoid the risk of forcing the vehicle off the jack, do not tighten the lug nuts fully until the vehicle has been lowered. Failure to follow this warning may result in serious injury.

4. Lower the vehicle to the ground by turning the jack handle counterclockwise.
5. Finish tightening the lug nuts. Push down on the wrench while at the end of the handle for increased leverage. Refer to "Torque Specifications" in "Technical Specifications" for correct lug nut torque.
6. After 25 miles (40 km) check the lug nut torque with a torque wrench to ensure that all lug nuts are properly seated against the wheel.

Vehicles Without Wheel Covers

1. Mount the road tire on the axle.
2. Install the remaining lug nuts with the cone shaped end of the nut toward the wheel. Lightly tighten the lug nuts.

WARNING!

To avoid the risk of forcing the vehicle off the jack, do not fully tighten the lug nuts until the vehicle has been lowered. Failure to follow this warning may result in serious injury.

3. Lower the vehicle to the ground by turning the jack handle counterclockwise.
4. Finish tightening the lug nuts. Push down on the wrench while at the end of the handle for increased leverage. Refer to "Torque Specifications" in "Technical Specifications" for correct lug nut torque.
5. After 25 miles (40 km) check the lug nut torque with a torque wrench to ensure that all lug nuts are properly seated against the wheel.

TIRE SERVICE KIT — IF EQUIPPED

Small punctures up to 1/4 inch (6 mm) in the tire tread can be sealed with Tire Service Kit. Foreign objects (e.g., screws or nails) should not be removed from the tire. Tire Service Kit can be used in outside temperatures down to approximately -4°F (-20°C).

This kit will provide a temporary tire seal, allowing you to drive your vehicle up to 100 miles (160 km) with a maximum speed of 55 mph (90 km/h).

Tire Service Kit Storage

The Tire Service Kit is located under the load floor in the cargo area.

Tire Service Kit Components And Operation

Using The Mode Select Knob And Hoses

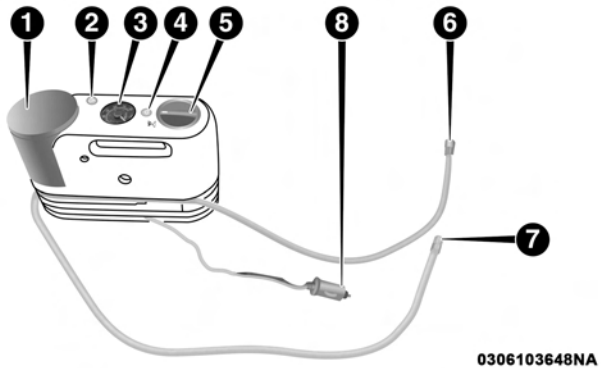

Tire Service Kit Components

1 — Sealant Bottle	5 — Mode Select Knob
2 — Deflation Button	6 — Sealant Hose (Clear)
3 — Pressure Gauge	7 — Air Pump Hose (Black)
4 — Power Button	8 — Power Plug (located on the bottom side of the Tire Service Kit)

Your Tire Service Kit is equipped with the following symbols to indicate the air or sealant mode.

Selecting Air Mode

Push in the Mode Select Knob (5) and turn to this position for air pump operation only. Use the Black Air Pump Hose (7) when selecting this mode.

Selecting Sealant Mode

Push in the Mode Select Knob (5) and turn to this position to inject the Tire Service Kit Sealant and to inflate the tire. Use the Sealant Hose (clear hose) (6) when selecting this mode.

Using The Power Button

Push and release the Power Button (4) once to turn on the Tire Service Kit. Push and release the Power Button (4) again to turn Off the Tire Service Kit.

Using The Deflation Button

Push the Deflation Button (2) to reduce the air pressure in the tire if it becomes over-inflated.

Tire Service Kit Usage Precautions

- Replace the Tire Service Kit Sealant Bottle (1) and Sealant Hose (6) prior to the expiration date (printed at the lower right hand corner on the bottle label) to assure optimum operation of the system. Refer to "Sealing a Tire with Tire Service Kit" section (F) "Sealant Bottle and Hose Replacement".

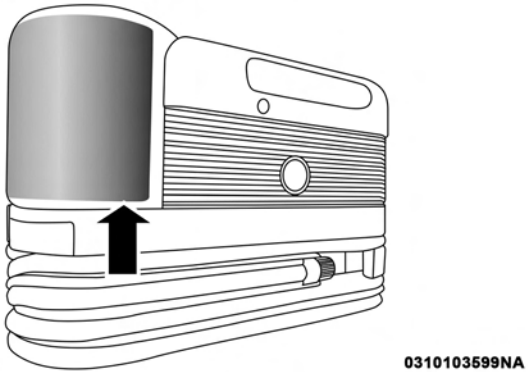

Tire Service Kit Expiration Date Location

- The Sealant Bottle (1) and Sealant Hose (6) are a one tire application use and need to be replaced after each use. Always replace these components immediately at your original equipment vehicle dealer.
- When the Tire Service Kit sealant is in a liquid form, clean water, and a damp cloth will remove the material

from the vehicle or tire and wheel components. Once the sealant dries, it can easily be peeled off and properly discarded.

- For optimum performance, make sure the valve stem on the wheel is free of debris before connecting the Tire Service Kit.
- You can use the Tire Service Kit air pump to inflate bicycle tires. The kit also comes with two needles, located in the Accessory Storage Compartment (on the bottom of the air pump) for inflating sport balls, rafts, or similar inflatable items. However, use only the Air Pump Hose (7) and make sure the Mode Select Knob (5) is in the Air Mode when inflating such items to avoid injecting sealant into them. The Tire Service Kit Sealant is only intended to seal punctures less than 1/4 inch (6 mm) diameter in the tread of your tire.
- Do not lift or carry the Tire Service Kit by the hoses.

WARNING!

- **Do not attempt to seal a tire on the side of the vehicle closest to traffic. Pull far enough off the road to avoid the danger of being hit when using the Tire Service Kit.**

(Continued)

WARNING! ***(Continued)***

- **Do not use Tire Service Kit or drive the vehicle under the following circumstances:**
  - **If the puncture in the tire tread is approximately 1/4 inch (6 mm) or larger.**
  - **If the tire has any sidewall damage.**
  - **If the tire has any damage from driving with extremely low tire pressure.**
  - **If the tire has any damage from driving on a flat tire.**
  - **If the wheel has any damage.**
  - **If you are unsure of the condition of the tire or the wheel.**
- **Keep Tire Service Kit away from open flames or heat sources.**
- **A loose Tire Service Kit thrown forward in a collision or hard stop could endanger the occupants of the vehicle. Always stow the Tire Service Kit in the place provided. Failure to follow these warnings can result in injuries that are serious or fatal to you, your passengers, and others around you.**
- **Take care not to allow the contents of Tire Service Kit to come in contact with hair, eyes, or clothing. Tire**

(Continued)

WARNING! ***(Continued)***

Service Kit sealant is harmful if inhaled, swallowed, or absorbed through the skin. It causes skin, eye, and respiratory irritation. Flush immediately with plenty of water if there is any contact with eyes or skin. Change clothing as soon as possible, if there is any contact with clothing.

- **Tire Service Kit Sealant solution contains latex. In case of an allergic reaction or rash, consult a physician immediately. Keep Tire Service Kit out of reach of children. If swallowed, rinse mouth immediately with plenty of water and drink plenty of water. Do not induce vomiting! Consult a physician immediately.**

Sealing A Tire With Tire Service Kit

(A) Whenever You Stop To Use Tire Service Kit:

1. Pull over to a safe location and turn on the vehicle's Hazard Warning flashers.
2. Verify that the valve stem (on the wheel with the deflated tire) is in a position that is near to the ground. This will allow the Tire Service Kit Hoses (6) and (7) to reach the valve stem and keep the Tire Service Kit flat on the ground. This will provide the best positioning of the kit when injecting the sealant into the deflated tire and running the air pump. Move the vehicle as necessary to place the valve stem in this position before proceeding.
3. Place the transmission in PARK (auto transmission) or in Gear (manual transmission) and place the ignition in the OFF position.
4. Set the parking brake.

(B) Setting Up To Use Tire Service Kit:

1. Push in the Mode Select Knob (5) and turn to the Sealant Mode position.
2. Uncoil the Sealant Hose (6) and then remove the cap from the fitting at the end of the hose.
3. Place the Tire Service Kit flat on the ground next to the deflated tire.
4. Remove the cap from the valve stem and then screw the fitting at the end of the Sealant Hose (6) onto the valve stem.
5. Uncoil the Power Plug (8) and insert the plug into the vehicle's 12 Volt power outlet.

NOTE: Do not remove foreign objects (e.g., screws or nails) from the tire.

(C) Injecting Tire Service Kit Sealant Into The Deflated Tire:

- Always start the engine before turning on the Tire Service Kit.

NOTE: Manual transmission vehicles must have the parking brake engaged and the gear selector in NEUTRAL.

- After pushing the Power Button (4), the sealant (white fluid) will flow from the Sealant Bottle (1) through the Sealant Hose (6) and into the tire.

NOTE: Sealant may leak out through the puncture in the tire.

If the sealant (white fluid) does not flow within 0 – 10 seconds through the Sealant Hose (6):

1. Push the Power Button (4) to turn off the Tire Service Kit. Disconnect the Sealant Hose (6) from the valve stem. Make sure the valve stem is free of debris. Reconnect the Sealant Hose (6) to the valve stem. Check that the Mode Select Knob (5) is in the Sealant Mode position and not Air Mode. Push the Power Button (4) to turn on the Tire Service Kit.
2. Connect the Power Plug (8) to a different 12 Volt power outlet in your vehicle or another vehicle, if available. Make sure the engine is running before turning on the Tire Service Kit.
3. The Sealant Bottle (1) may be empty due to previous use. Call for assistance.

NOTE: If the Mode Select Knob (5) is on Air Mode and the pump is operating, air will dispense from the Air Pump Hose (7) only, not the Sealant Hose (6).

If the sealant (white fluid) does flow through the Sealant Hose (6):

1. Continue to operate the pump until sealant is no longer flowing through hose (typically takes 30 - 70 seconds). As the sealant flows through the Sealant Hose (6), the Pressure Gauge (3) can read as high as 70 psi (4.8 Bar). The Pressure Gauge (3) will decrease quickly from approximately 70 psi (4.8 Bar) to the actual tire pressure when the Sealant Bottle (1) is empty.
2. The pump will start to inject air into the tire immediately after the Sealant Bottle (1) is empty. Continue to operate the pump and inflate the tire to the pressure indicated on the tire pressure label on the driver-side

latch pillar (recommended pressure). Check the tire pressure by looking at the Pressure Gauge (3).

If the tire does not inflate to at least 26 psi (1.8 Bar) pressure within 15 minutes:

- The tire is too badly damaged. Do not attempt to drive the vehicle further. Call for assistance.

NOTE: If the tire becomes overinflated, push the Deflation Button to reduce the tire pressure to the recommended inflation pressure before continuing.

If the tire inflates to the recommended pressure or is at least 26 psi (1.8 Bar) pressure within 15 minutes:

1. Push the Power Button (4) to turn off the Tire Service Kit.
2. Remove the Speed Limit sticker from the top of the Sealant Bottle (1) and place the sticker on the instrument panel.
3. Immediately disconnect the Sealant Hose (6) from the valve stem, reinstall the cap on the fitting at the end of the hose, and place the Tire Service Kit in the vehicle storage location. Quickly proceed to (D) "Drive Vehicle."

CAUTION!

- **The metal end fitting from Power Plug (8) may get hot after use, so it should be handled carefully.**
- **Failure to reinstall the cap on the fitting at the end of the Sealant Hose (6) can result in sealant contacting your skin, clothing, and the vehicle's interior. It can also result in sealant contacting internal Tire Service Kit components which may cause permanent damage to the kit.**

(D) Drive Vehicle:

Immediately after injecting sealant and inflating the tire, drive the vehicle 5 miles (8 km) or 10 minutes to ensure distribution of the Tire Service Kit Sealant within the tire. Do not exceed 55 mph (90 km/h).

WARNING!

Tire Service Kit is not a permanent flat tire repair. Have the tire inspected and repaired or replaced after using Tire Service Kit. Do not exceed 55 mph (90 km/h) until the tire is repaired or replaced. Failure to follow this warning can result in injuries that are serious or fatal to you, your passengers, and others around you.

(E) After Driving:

Pull over to a safe location. Refer to "Whenever You Stop to Use Tire Service Kit" before continuing.

1. Push in the Mode Select Knob (5) and turn to the Air Mode position.
2. Uncoil the power plug and insert the plug into the vehicle's 12 Volt power outlet.
3. Uncoil the Air Pump Hose (7) (black in color) and screw the fitting at the end of hose (7) onto the valve stem.
4. Check the pressure in the tire by reading the Pressure Gauge (3).

If tire pressure is less than 19 psi (1.3 Bar):

The tire is too badly damaged. Do not attempt to drive the vehicle further. Call for assistance.

If the tire pressure is 19 psi (1.3 Bar) or higher:

1. Push the Power Button (4) to turn on Tire Service Kit and inflate the tire to the pressure indicated on the tire and loading information label on the driver-side door opening.

NOTE: If the tire becomes over-inflated, push the Deflation Button to reduce the tire pressure to the recommended inflation pressure before continuing.

2. Disconnect the Tire Service Kit from the valve stem, reinstall the cap on the valve stem and unplug from 12 Volt outlet.
3. Place the Tire Service Kit in its proper storage area in the vehicle.
4. Have the tire inspected and repaired or replaced at the earliest opportunity at an authorized dealer or tire service center.
5. Remove the Speed Limit sticker from the instrument panel after the tire has been repaired.
6. Replace the Sealant Bottle (1) and Sealant Hose (6) assembly at your authorized dealer as soon as possible. Refer to (F) "Sealant Bottle and Hose Replacement".

NOTE: When having the tire serviced, advise the authorized dealer or service center that the tire has been sealed using the Tire Service Kit.

(F) Sealant Bottle And Hose Replacement:

1. Uncoil the Sealant Hose (6) (clear in color).
2. Locate the round Sealant Bottle release button in the recessed area under the sealant bottle.
3. Push the Sealant Bottle release button. The Sealant Bottle (1) will pop up. Remove the bottle and dispose of it accordingly.
4. Clean any remaining sealant from the Tire Service Kit housing.
5. Position the new Sealant Bottle (1) in the housing so that the Sealant Hose (6) aligns with the hose slot in the front of the housing. Push the bottle into the housing. An audible click will be heard indicating the bottle is locked into place.
6. Verify that the cap is installed on the fitting at the end of the Sealant Hose (6) and return the hose to its storage area (located on the bottom of the air pump).
7. Return the Tire Service Kit to its storage location in the vehicle.

JUMP-STARTING PROCEDURES

If your vehicle has a discharged battery, it can be jump-started using a set of jumper cables and a battery in another vehicle or by using a portable battery booster pack. Jump-starting can be dangerous if done improperly, so please follow the procedures in this section carefully.

NOTE: When using a portable battery booster pack, follow the manufacturer's operating instructions and precautions.

WARNING!

Do not attempt jump-starting if the battery is frozen. It could rupture or explode and cause personal injury.

CAUTION!

Do not use a portable battery booster pack or any other booster source with a system voltage greater than 12 Volts or damage to the battery, starter motor, alternator or electrical system may occur.

Preparations For Jump-Start

The battery in your vehicle is located in the front of the engine compartment below the air intake duct. To access the battery remove the air intake duct by turning the two finger screws, located on the radiator support.

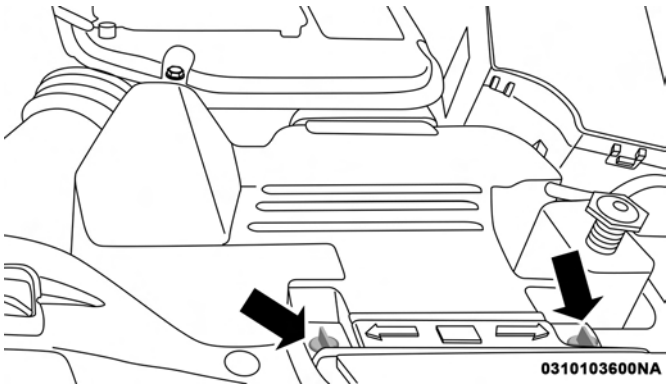

Air Intake Finger Screws

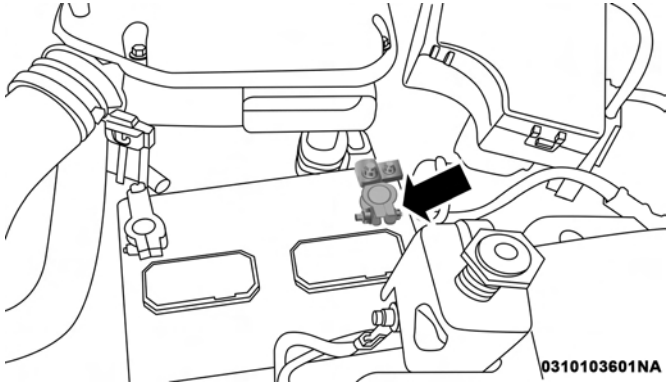

Positive Battery Post

WARNING!

- **Take care to avoid the radiator cooling fan whenever the hood is raised. It can start anytime the ignition switch is ON. You can be injured by moving fan blades.**
- **Remove any metal jewelry such as rings, watch bands and bracelets that could make an inadvertent electrical contact. You could be seriously injured.**
- **Batteries contain sulfuric acid that can burn your skin or eyes and generate hydrogen gas which is**

(Continued)

WARNING! *(Continued)*

flammable and explosive. Keep open flames or sparks away from the battery.

1. Set the parking brake, shift the automatic transmission into PARK (manual transmission to NEUTRAL) and turn the ignition to LOCK.
2. Turn off the heater, radio, and all unnecessary electrical accessories.
3. If using another vehicle to jump-start the battery, park the vehicle within the jumper cables reach, set the parking brake and make sure the ignition is OFF.

WARNING!

Do not allow vehicles to touch each other as this could establish a ground connection and personal injury could result.

Jump-Starting Procedure

WARNING!

Failure to follow this jump-starting procedure could result in personal injury or property damage due to battery explosion.

CAUTION!

Failure to follow these procedures could result in damage to the charging system of the booster vehicle or the discharged vehicle.

NOTE: Remove Air Intake before proceeding with this Jump-Starting procedure.

Connecting The Jumper Cables

1. Connect the positive **(+)** end of the jumper cable to the positive **(+)** post of the discharged vehicle.
2. Connect the opposite end of the positive **(+)** jumper cable to the positive **(+)** post of the booster battery.
3. Connect the negative end **(-)** of the jumper cable to the negative **(-)** post of the booster battery.

4. Connect the opposite end of the negative **(-)** jumper cable to a good engine ground (exposed metal part of the discharged vehicle's engine) away from the battery and the fuel injection system.

WARNING!

Do not connect the jumper cable to the negative (-) post of the discharged battery. The resulting electrical spark could cause the battery to explode and could result in personal injury. Only use the specific ground point, do not use any other exposed metal parts.

5. Start the engine in the vehicle that has the booster battery, let the engine idle a few minutes, and then start the engine in the vehicle with the discharged battery.
6. Once the engine is started, remove the jumper cables in the reverse sequence:

Disconnecting The Jumper Cables

1. Disconnect the negative **(-)** end of the jumper cable from the engine ground of the vehicle with the discharged battery.
2. Disconnect the opposite end of the negative **(-)** jumper cable from the negative **(-)** post of the booster battery.
3. Disconnect the positive **(+)** end of the jumper cable from the positive **(+)** post of the booster battery.
4. Disconnect the opposite end of the positive **(+)** jumper cable from the positive **(+)** post of the vehicle with the discharged battery.
5. Reinstall the air intake duct.

If frequent jump-starting is required to start your vehicle you should have the battery and charging system inspected at your authorized dealer.

CAUTION!

Accessories plugged into the vehicle power outlets draw power from the vehicle's battery, even when not in use (i.e., cellular devices, etc.). Eventually, if plugged in long enough without engine operation, the vehicle's battery will discharge sufficiently to degrade battery life and/or prevent the engine from starting.

IF YOUR ENGINE OVERHEATS

In any of the following situations, you can reduce the potential for overheating by taking the appropriate action.

- On the highways — slow down.
- In city traffic — while stopped, place the transmission in NEUTRAL, but do not increase engine idle speed.

NOTE: There are steps that you can take to slow down an impending overheat condition:

- If your air conditioner (A/C) is on, turn it off. The A/C system adds heat to the engine cooling system and turning the A/C off can help remove this heat.
- You can also turn the temperature control to maximum heat, the mode control to floor and the blower control to high. This allows the heater core to act as a supplement to the radiator and aids in removing heat from the engine cooling system.

WARNING!

You or others can be badly burned by hot engine coolant (antifreeze) or steam from your radiator. If you see or hear steam coming from under the hood, do not open the hood until the radiator has had time to cool. Never try to open a cooling system pressure cap when the radiator or coolant bottle is hot.

CAUTION!

Driving with a hot cooling system could damage your vehicle. If the pointer rises to the H (red) mark, the instrument cluster will sound a chime. When safe, pull over and stop the vehicle with the engine at idle. Turn off the air conditioning and wait until the pointer drops back into the normal range. If the pointer remains on the H (red) mark for more than a minute, turn the engine off immediately and call for service.

GEAR SELECTOR OVERRIDE

If a malfunction occurs and the gear selector cannot be moved out of the PARK position, you can use the following procedure to temporarily move the gear selector:

1. Turn the engine OFF.
2. Firmly apply the parking brake.
3. Using a small screwdriver or similar tool, remove the gear selector override access cover (located on the right side of the gear selector housing).

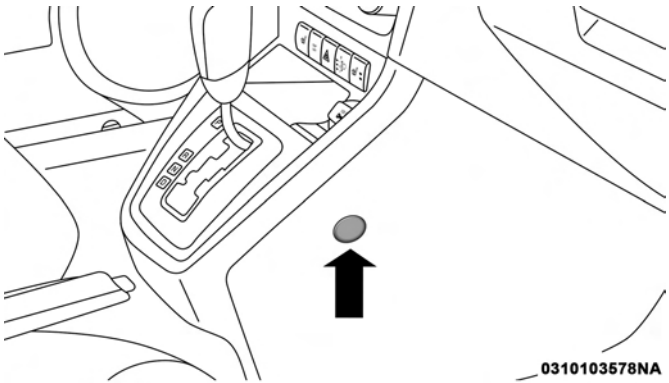

Gear Selector Override Access Cover

4. Turn the ignition switch to the ACC or ON/RUN position, but do not start the engine.
5. Press and maintain firm pressure on the brake pedal.
6. Insert the screwdriver or similar tool into the access port, and push and hold the override release lever forward.
7. Move the gear selector to the NEUTRAL position.
8. The vehicle may then be started in NEUTRAL.
9. Reinstall the gear selector override access cover.

FREEING A STUCK VEHICLE

If your vehicle becomes stuck in mud, sand or snow, it can often be moved using a rocking motion. Turn the steering wheel right and left to clear the area around the front wheels. Then, shift back and forth between DRIVE and REVERSE (with automatic transmission) or SECOND GEAR and REVERSE (with manual transmission), while gently pressing the accelerator. Use the least amount of accelerator pedal pressure that will maintain the rocking motion, without spinning the wheels or racing the engine.

CAUTION!

Racing the engine or spinning the wheels may lead to transmission overheating and failure. Allow the engine to idle with the transmission in NEUTRAL for at least one minute after every five rocking-motion cycles. This will minimize overheating and reduce the risk of clutch or transmission failure during prolonged efforts to free a stuck vehicle.

NOTE: Push the "ESC Off" switch to place the Electronic Stability Control (ESC) system in "Partial Off" mode before rocking the vehicle. Refer to "Electronic Brake Control System" in "Safety" for further information. Once the vehicle has been freed, push the "ESC Off" switch again to restore "ESC On" mode.

WARNING!

Fast spinning tires can be dangerous. Forces generated by excessive wheel speeds may cause damage, or even failure, of the axle and tires. A tire could explode and injure someone. Do not spin your vehicle's wheels faster than 30 mph (48 km/h) or for longer than 30 seconds continuously without stopping when you are

(Continued)

WARNING! *(Continued)*

stuck and do not let anyone near a spinning wheel, no matter what the speed.

CAUTION!

- **When "rocking" a stuck vehicle by shifting between DRIVE/SECOND GEAR and REVERSE, do not spin the wheels faster than 15 mph (24 km/h), or drive-train damage may result.**
- **Revving the engine or spinning the wheels too fast may lead to transmission overheating and failure. It can also damage the tires. Do not spin the wheels above 30 mph (48 km/h) while in gear (no transmission shifting occurring).**

TOWING A DISABLED VEHICLE

This section describes procedures for towing a disabled vehicle using a commercial towing service.

Towing Condition	Wheels OFF The Ground	Manual Transmission	6-Speed Automatic (FWD Only)	6-Speed Automatic 4WD	CVT Automatic Transmission
Flat Tow	NONE	• Transmission in NEUTRAL • Key in ACC or ON/RUN position	**If transmission is operable:** • Transmission in NEUTRAL • 25 mph (40 km/h) **max** speed • 15 miles (24 km) **max** distance	**If transmission is operable:** • Transmission in NEUTRAL • 25 mph (40 km/h) **max** speed • 15 miles (24 km) **max** distance	**NOT ALLOWED**
Wheel Lift Or Dolly Tow	Rear	**NOT ALLOWED**		**NOT ALLOWED**	**NOT ALLOWED**
	Front	FWD Models **ONLY**	**OK**	**NOT ALLOWED**	FWD Models **ONLY**
Flatbed	**ALL**	**BEST METHOD**	**BEST METHOD**	**BEST METHOD**	**BEST METHOD**

With Ignition Key

Automatic Transmission

- Front Wheel Drive (FWD) vehicles can be towed with the front wheels elevated, or on a flatbed truck (all four wheels **OFF** the ground).
- Four-Wheel Drive (4WD) vehicles can be towed on a flatbed truck (all four wheels **OFF** the ground).

If the transmission is operable, Front Wheel Drive (FWD) and Four Wheel Drive (4WD) vehicles, with the 6-speed automatic transmission only (**NOT** the Continuously Variable automatic transmission [CVT]), may be flat towed (with all four wheels on the ground) under the following conditions:

- The transmission must be in NEUTRAL.
- The towing speed must not exceed 25 mph (40 km/h).
- The towing distance must not exceed 15 miles (24 km).

Front Wheel Drive (FWD) models (with 6-speed automatic **only**) may also be towed (under the same limitations shown above) with the rear wheels elevated.

CAUTION!

- **DO NOT flat tow any vehicle equipped with a CVT automatic transmission. Damage to the drivetrain will result. If these vehicles require towing, make sure all drive wheels are OFF the ground.**
- **Towing this vehicle in violation of the above requirements can cause severe transmission and/or transfer case damage. Damage from improper towing is not covered under the New Vehicle Limited Warranty..**

If the vehicle's battery is discharged, refer to "Gear Selector Override" in this section for instructions on shifting the automatic transmission out of PARK for towing.

Manual Transmission

- Front Wheel Drive (FWD) or Four-Wheel Drive (4WD) vehicles can be flat towed (all four wheels on the ground) with the transmission in NEUTRAL.
- FWD vehicles can be towed with the front wheels elevated.
- FWD or 4WD vehicles can be towed on a flatbed truck (all wheels **OFF** the ground).

CAUTION!

- **DO NOT flat tow any disabled vehicle if condition is related to the clutch, transmission or driveline. Additional damage to the drivetrain could result.**
- **Towing this vehicle in violation of the above requirements can cause severe engine, transmission, or drivetrain damage. Damage from improper towing is not covered under the New Vehicle Limited Warranty.**

All Transmissions

If you must use the accessories (wipers, defroster, etc.) while being towed, the key must be in the ON/RUN position, not the ACC position. Make certain the transmission remains in NEUTRAL.

CAUTION!

- **Do not use sling-type equipment when towing. Vehicle damage may occur.**
- **When securing the vehicle to a flatbed truck, do not attach to front or rear suspension components. Damage to your vehicle may result from improper towing.**

Without The Ignition Key

Special care must be taken when the vehicle is towed with the ignition in the LOCK/OFF position. The only approved method of towing without the ignition key is with a flatbed truck. Proper towing equipment is necessary to prevent damage to the vehicle.

ENHANCED ACCIDENT RESPONSE SYSTEM (EARS)

This vehicle is equipped with an Enhanced Accident Response System.

Please refer to “Occupant Restraint Systems” in “Safety” for further information on the Enhanced Accident Response System (EARS) function.

EVENT DATA RECORDER (EDR)

This vehicle is equipped with an Event Data Recorder (EDR). The main purpose of an EDR is to record data that will assist in understanding how a vehicle’s systems performed under certain crash or near crash-like situations, such as an air bag deployment or hitting a road obstacle.

Please refer to “Occupant Restraint Systems” in “Safety” for further information on the Event Data Recorder (EDR).

SERVICING AND MAINTENANCE

CONTENTS

■ SCHEDULED SERVICING 281
- □ Maintenance Plan. 282

■ ENGINE COMPARTMENT 286
- □ 2.0L Engine 286
- □ 2.4L Engine 287
- □ Checking Oil Level 288
- □ Cooling System 288
- □ Adding Washer Fluid 289

■ DEALER SERVICE 289
- □ Engine Oil 290
- □ Engine Oil Filter 291
- □ Air Conditioner Maintenance 291
- □ Engine Air Cleaner Filter 293
- □ Body Lubrication 294
- □ Windshield Wiper Blades 294
- □ Exhaust System 295
- □ Cooling System 296
- □ Brake System 301
- □ Manual Transmission — If Equipped 303
- □ Automatic Transmission (Six-Speed) — If Equipped 303
- □ Automatic Transmission (CVT) — If Equipped . .305
- □ Rear Drive Assembly (RDA) — AWD/4WD Models Only 306
- □ Power Transfer Unit (PTU) — AWD/4WD Models Only 307

■ RAISING THE VEHICLE 307

■ TIRES 307
- □ Tire Safety Information 307

- Tires — General Information 315
- Tire Types 321
- Spare Tires — If Equipped 322
- Wheel And Wheel Trim Care 324
- Tire Chains (Traction Devices) 325
- Tire Rotation Recommendations 326

■ DEPARTMENT OF TRANSPORTATION UNIFORM TIRE QUALITY GRADES 326

- Treadwear 327
- Traction Grades 327
- Temperature Grades 327

■ STORING THE VEHICLE 328

■ BODYWORK 328

- Protection From Atmospheric Agents 328
- Body And Underbody Maintenance 329
- Preserving The Bodywork 329

■ INTERIORS 330

- Seats And Fabric Parts 330
- Plastic And Coated Parts. 331
- Leather Parts 331
- Glass Surfaces 332

SCHEDULED SERVICING

Your vehicle is equipped with an automatic oil change indicator system. The oil change indicator system will remind you that it is time to take your vehicle in for scheduled maintenance.

Based on engine operation conditions, the oil change indicator message will illuminate. This means that service is required for your vehicle. Operating conditions such as frequent short-trips, trailer tow, extremely hot or cold ambient temperatures will influence when the "Change Oil" or "Oil Change Required" message is displayed. Severe Operating Conditions can cause the change oil message to illuminate as early as 3,500 miles (5,600 km) since last reset. Have your vehicle serviced as soon as possible, within the next 500 miles (805 km).

On instrument cluster display equipped vehicles, "Oil Change Required" will be displayed in the cluster and a single chime will sound, indicating that an oil change is necessary.

On non-instrument cluster display equipped vehicles, "Change Oil" will flash in the odometer and a single chime will sound, indicating that an oil change is necessary.

Your authorized dealer will reset the oil change indicator message after completing the scheduled oil change. If a scheduled oil change is performed by someone other than your authorized dealer, the message can be reset by referring to the steps described under "Instrument Cluster Display" in "Getting To Know Your Instrument Panel" for further information.

NOTE: Under no circumstances should oil change intervals exceed 10,000 miles (16,000 km), twelve months or 350 hours of engine run time, whichever comes first. The 350 hours of engine run or idle time is generally only a concern for fleet customers.

Severe Duty All Models

Change Engine Oil at 4,000 miles (6,500 km) if the vehicle is operated in a dusty and off road environment or is operated predominately at idle or only very low engine RPM's. This type of vehicle use is considered Severe Duty.

Once A Month Or Before A Long Trip:

- Check engine oil level
- Check windshield washer fluid level
- Check the tire inflation pressures and look for unusual wear or damage

- Check the fluid levels of the coolant reservoir, brake master cylinder, power steering and fill as needed
- Check function of all interior and exterior lights

Maintenance Plan

Required Maintenance Intervals.

Refer to the "Maintenance Plan" on the following pages for the required maintenance intervals.

At Every Oil Change Interval As Indicated By Oil Change Indicator System:
• Change oil and filter.
• Rotate the tires. **Rotate at the first sign of irregular wear, even if it occurs before the oil indicator system turns on.**
• Inspect battery and clean and tighten terminals as required.

At Every Oil Change Interval As Indicated By Oil Change Indicator System:
• Inspect brake pads, shoes, rotors, drums, hoses and park brake.
• Inspect engine cooling system protection and hoses.
• Inspect exhaust system.
• Inspect engine air cleaner if using in dusty or off-road conditions.

Mileage or time passed (whichever comes first)	20,000	30,000	40,000	50,000	60,000	70,000	80,000	90,000	100,000	110,000	120,000	130,000	140,000	150,000
Or Years:	2	3	4	5	6	7	8	9	10	11	12	13	14	15
Or Kilometers:	32,000	48,000	64,000	80,000	96,000	112,000	128,000	144,000	160,000	176,000	192,000	208,000	224,000	240,000
Additional Inspections														
Inspect the CV joints.	X		X		X		X		X		X		X	
Inspect front suspension, boot seals. tie rod ends, and replace if necessary.	X		X		X		X		X		X		X	
Inspect brake linings, replace if necessary. Check park brake function, adjust if necessary.	X		X		X		X		X		X		X	
Additional Maintenance														
Replace engine air cleaner filter.		X			X			X			X			X
Replace air conditioning/cabin air filter.	X		X		X		X		X		X		X	
Replace spark plugs **		X			X			X			X			X
Flush and replace the engine coolant at 10 years or 150,000 miles (240,000 km) whichever comes first.									X					X
Replace rear drive assembly (RDA) fluid.					X						X			
Replace power transfer unit (PTU) fluid.					X						X			
Change automatic transmission fluid and filter if using your vehicle for any of the following: police, taxi, fleet, or frequent trailer towing. (CVT only)					X						X			

Mileage or time passed (whichever comes first)	20,000	30,000	40,000	50,000	60,000	70,000	80,000	90,000	100,000	110,000	120,000	130,000	140,000	150,000
Or Years:	2	3	4	5	6	7	8	9	10	11	12	13	14	15
Or Kilometers:	32,000	48,000	64,000	80,000	96,000	112,000	128,000	144,000	160,000	176,000	192,000	208,000	224,000	240,000
Change the automatic transmission fluid and filter. (CVT only)											X			
Change the automatic transmission fluid (six-speed only) if you frequently drive: on rough or unpaved roads, on mountain roads, on short trips, in heavy city traffic during hot weather, or if you use the vehicle for police, taxi, fleet, or frequent trailer towing.					X						X			
Change the manual transmission fluid if using your vehicle for any of the following: trailer towing, heavy loading, taxi, police, delivery service (commercial service), off-road, desert operation or more than 50% of your driving is at sustained high speeds during hot weather, above 90°F (32°C).				X					X					X
Inspect and replace PCV valve if necessary.									X					

** The spark plug change interval is mileage based only, yearly intervals do not apply.

WARNING!

- **You can be badly injured working on or around a motor vehicle. Do only service work for which you have the knowledge and the right equipment. If you have any doubt about your ability to perform a service job, take your vehicle to a competent mechanic.**
- **Failure to properly inspect and maintain your vehicle could result in a component malfunction and effect vehicle handling and performance. This could cause an accident.**

ENGINE COMPARTMENT
2.0L Engine

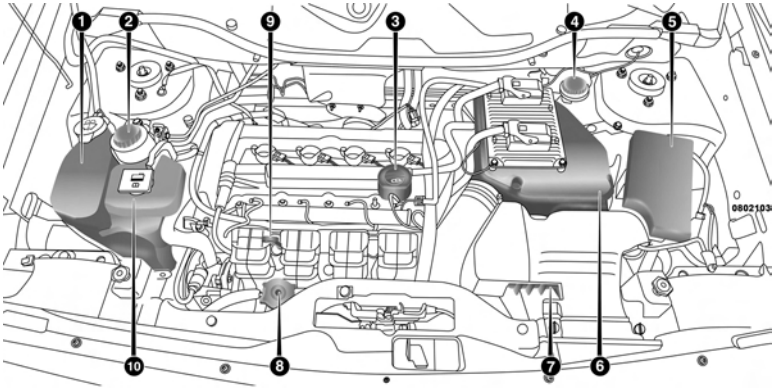

1 — Washer Fluid Reservoir
2 — Power Steering Fluid Reservoir
3 — Engine Oil Fill
4 — Brake Fluid Reservoir
5 — Integrated Power Module (Fuses)
6 — Air Cleaner Filter
7 — Battery
8 — Coolant Pressure Cap
9 — Engine Oil Dipstick
10 — Engine Coolant Reservoir

2.4L Engine

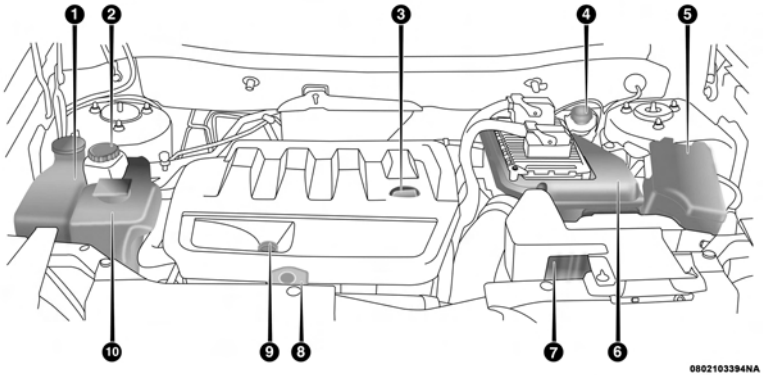

1 — Washer Fluid Reservoir
2 — Power Steering Fluid Reservoir
3 — Engine Oil Fill
4 — Brake Fluid Reservoir
5 — Integrated Power Module (Fuses)
6 — Air Cleaner Filter
7 — Battery
8 — Coolant Pressure Cap
9 — Engine Oil Dipstick
10 — Engine Coolant Reservoir

Checking Oil Level

To assure proper engine lubrication, the engine oil must be maintained at the correct level. Check the oil level at regular intervals, such as every fuel stop. The best time to check the engine oil level is about five minutes after a fully warmed engine is shut off. Do not check oil level before starting the engine after it has sat overnight. Checking engine oil level when the engine is cold will give you an incorrect reading.

Checking the oil while the vehicle is on level ground and only when the engine is hot, will improve the accuracy of the oil level readings. Maintain the oil level between the range markings on the dipstick. The range markings will consist of a crosshatch zone which depicts the MIN at the low end of the range and MAX at the high end of the range. Adding 1 quart (1 liter) of oil when the reading is at the low end of the indicated range will result in the oil level at the full end of the indicator range.

CAUTION!

Do not overfill the engine. Overfilling the engine will cause oil aeration, which can lead to loss of oil pressure and an increase in oil temperature. This could damage

(Continued)

CAUTION! *(Continued)*

your engine. Also, be sure the oil fill cap is replaced and tightened after adding oil.

Cooling System

WARNING!

- **When working near the radiator cooling fan, disconnect the fan motor lead or turn the ignition switch to the OFF position. The fan is temperature controlled and can start at any time the ignition switch is in the ON position.**
- **You or others can be badly burned by hot engine coolant (antifreeze) or steam from your radiator. If you see or hear steam coming from under the hood, do not open the hood until the radiator has had time to cool. Never try to open a cooling system pressure cap when the radiator is hot.**

Coolant Checks

Check engine coolant (antifreeze) protection every 12 months (before the onset of freezing weather, where applicable). If the engine coolant (antifreeze) is dirty or rusty in appearance, the system should be drained, flushed, and

refilled with fresh engine coolant (antifreeze). Check the front of the A/C condenser for any accumulation of bugs, leaves, etc. If dirty, clean by gently spraying water from a garden hose vertically down the face of the condenser.

Check the coolant recovery bottle tubing for brittle rubber, cracking, tears, cuts, and tightness of the connection at the bottle and radiator. Inspect the entire system for leaks.

Adding Washer Fluid

The washer fluid reservoir is located in the engine compartment, and the fluid level should be checked at regular intervals. Fill the reservoir with windshield washer solvent only (not radiator antifreeze).

When refilling the washer fluid reservoir, take some washer fluid and apply it to a cloth or towel and wipe clean the wiper blades, this will help blade performance. To prevent freeze-up of your windshield washer system in cold weather, select a solution or mixture that meets or exceeds the temperature range of your climate. This rating information can be found on most washer fluid containers.

WARNING!

Commercially available windshield washer solvents are flammable. They could ignite and burn you. Care must be exercised when filling or working around the washer solution.

DEALER SERVICE

Your authorized dealer has the qualified service personnel, special tools, and equipment to perform all service operations in an expert manner. Service Manuals are available which include detailed service information for your vehicle. Refer to these Service Manuals before attempting any procedure yourself.

NOTE: Intentional tampering with emissions control systems may void your warranty and could result in civil penalties being assessed against you.

WARNING!

You can be badly injured working on or around a motor vehicle. Only do service work for which you have the knowledge and the proper equipment. If you have any doubt about your ability to perform a service job, take your vehicle to a competent mechanic.

Engine Oil

Change Engine Oil

The oil change indicator system will remind you that it is time to take your vehicle in for scheduled maintenance. Refer to the "Maintenance Plan" for further information.

NOTE: Under no circumstances should oil change intervals exceed 10,000 miles (16,000 km), twelve months or 350 hours of engine run time, whichever comes first. The 350 hours of engine run or idle time is generally only a concern for fleet customers.

Engine Oil Selection

For best performance and maximum protection under all types of operating conditions, the manufacturer only recommends engine oils that are API Certified and meet the requirements of FCA Material Standard MS-6395.

American Petroleum Institute (API) Engine Oil Identification Symbol

This symbol means that the oil has been certified by the American Petroleum Institute (API). The manufacturer only recommends API Certified engine oils.

This symbol certifies 0W-20, 5W-20, 0W-30, 5W-30 and 10W-30 engine oils.

CAUTION!

Do not use chemical flushes in your engine oil as the chemicals can damage your engine. Such damage is not covered by the New Vehicle Limited Warranty.

Engine Oil Viscosity (SAE Grade) — 2.0L, 2.4L Engine

Mopar SAE 5W-20 engine oil approved to FCA Material Standard MS-6395 such as Pennzoil, Shell Helix or equivalent is recommended for all operating temperatures. This engine oil improves low temperature starting and vehicle fuel economy.

The engine oil filler cap also shows the recommended engine oil viscosity for your engine. For information on engine oil filler cap location, refer to "Engine Compartment" in this section.

Lubricants which do not have both the engine oil certification mark and the correct SAE viscosity grade number should not be used.

Synthetic Engine Oils

You may use synthetic engine oils provided the recommended oil quality requirements are met, and the recommended maintenance intervals for oil and filter changes are followed.

Synthetic engine oils which do not have both the engine oil certification mark and the correct SAE viscosity grade number should not be used.

Materials Added To Engine Oil

The manufacturer strongly recommends against the addition of any additives (other than leak detection dyes) to the engine oil. Engine oil is an engineered product and its performance may be impaired by supplemental additives.

Disposing Of Used Engine Oil And Oil Filters

Care should be taken in disposing of used engine oil and oil filters from your vehicle. Used oil and oil filters, indiscriminately discarded, can present a problem to the environment. Contact your authorized dealer, service station or governmental agency for advice on how and where used oil and oil filters can be safely discarded in your area.

Engine Oil Filter

The engine oil filter should be replaced with a new filter at every engine oil change.

Engine Oil Filter Selection

This manufacturer's engines have a full-flow type disposable oil filter. Use a filter of this type for replacement. The quality of replacement filters varies considerably. Only high quality filters should be used to assure most efficient service. Mopar engine oil filters are high quality oil filters and are recommended.

Air Conditioner Maintenance

For best possible performance, your air conditioner should be checked and serviced by an authorized dealer at the start of each warm season. This service should include

cleaning of the condenser fins and a performance test. Drive belt tension should also be checked at this time.

WARNING!

- **Use only refrigerants and compressor lubricants approved by the manufacturer for your air conditioning system. Some unapproved refrigerants are flammable and can explode, injuring you. Other unapproved refrigerants or lubricants can cause the system to fail, requiring costly repairs. Refer to Warranty Information Book, in the owner's information kit.**
- **The air conditioning system contains refrigerant under high pressure. To avoid risk of personal injury or damage to the system, adding refrigerant or any repair requiring lines to be disconnected should be done by an experienced technician.**

CAUTION!

Do not use chemical flushes in your air conditioning system as the chemicals can damage your air conditioning components. Such damage is not covered by the New Vehicle Limited Warranty.

Refrigerant Recovery And Recycling

R-134a Air Conditioning Refrigerant is a hydrofluorocarbon (HFC) that is endorsed by the Environmental Protection Agency and is an ozone-saving product. However, the manufacturer recommends that air conditioning service be performed by authorized dealer or other service facilities using recovery and recycling equipment.

NOTE: Use only manufacturer approved A/C system PAG compressor oil and refrigerants.

A/C Air Filter

Refer to the "Maintenance Plan" for the proper maintenance intervals.

WARNING!

Do not remove the cabin air filter while the vehicle is running, or while the ignition is in the ACC or ON/RUN mode. With the cabin air filter removed and the blower operating, the blower can contact hands and may propel dirt and debris into your eyes, resulting in personal injury.

The A/C air filter is located in the fresh air inlet behind the glove compartment. Perform the following procedure to replace the filter:

1. Open the glove compartment and remove all contents.
2. Push in on the sides of the glove compartment and lower the door.
3. Pivot the glove compartment downward.
4. Disengage the two retaining tabs that secure the filter cover to the HVAC housing, and remove the cover.

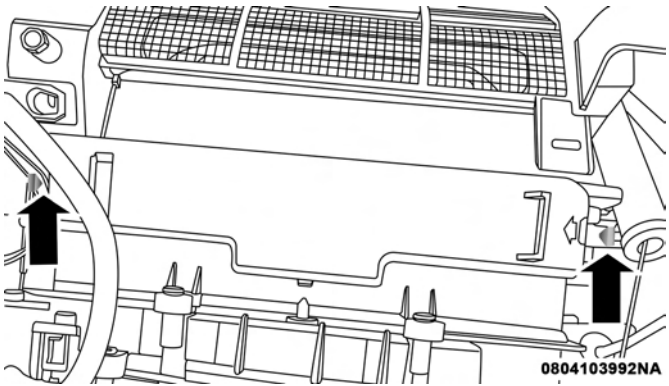

A/C Air Filter Retaining Tabs

5. Remove the A/C air filter by pulling it straight out of the housing.
6. Install the A/C air filter with the arrow on the filter pointing toward the floor. When installing the filter cover, make sure the retaining tabs fully engage the cover.

CAUTION!

The cabin air filter is identified with an arrow to indicate airflow direction through the filter. Failure to properly install the filter will result in the need to replace it more often.

7. Rotate the glove compartment door back into position.

Engine Air Cleaner Filter

Refer to the “Maintenance Plan” in the “Scheduled Servicing” section for the proper maintenance intervals.

WARNING!

The air induction system (air cleaner, hoses, etc.) can provide a measure of protection in the case of engine backfire. Do not remove the air induction system (air cleaner, hoses, etc.) unless such removal is necessary for repair or maintenance. Make sure that no one is near the engine compartment before starting the vehicle with the air induction system (air cleaner, hoses, etc.) removed. Failure to do so can result in serious personal injury.

Engine Air Cleaner Filter Selection

The quality of replacement engine air cleaner filters varies considerably. Only high quality filters should be used to assure most efficient service. Mopar engine air cleaner filters are a high quality filter and are recommended.

Body Lubrication

Locks and all body pivot points, including such items as seat tracks, door hinge pivot points and rollers, liftgate, tailgate, decklid, sliding doors and hood hinges, should be lubricated periodically with a lithium based grease, such as Mopar Spray White Lube to assure quiet, easy operation and to protect against rust and wear. Prior to the application of any lubricant, the parts concerned should be wiped clean to remove dust and grit; after lubricating excess oil and grease should be removed. Particular attention should also be given to hood latching components to ensure proper function. When performing other underhood services, the hood latch, release mechanism and safety catch should be cleaned and lubricated.

The external lock cylinders should be lubricated twice a year, preferably in the Fall and Spring. Apply a small amount of a high quality lubricant, such as Mopar Lock Cylinder Lubricant directly into the lock cylinder.

Windshield Wiper Blades

Clean the rubber edges of the wiper blades and the windshield periodically with a sponge or soft cloth and a mild nonabrasive cleaner. This will remove accumulations of salt or road film.

Operation of the wipers on dry glass for long periods may cause deterioration of the wiper blades. Always use washer fluid when using the wipers to remove salt or dirt from a dry windshield.

Avoid using the wiper blades to remove frost or ice from the windshield. Keep the blade rubber out of contact with petroleum products such as engine oil, gasoline, etc.

NOTE: Life expectancy of wiper blades varies depending on geographical area and frequency of use. Poor performance of blades may be present with chattering, marks, water lines or wet spots. If any of these conditions are present, clean the wiper blades or replace as necessary.

Exhaust System

The best protection against carbon monoxide entry into the vehicle body is a properly maintained engine exhaust system.

If you notice a change in the sound of the exhaust system; or if the exhaust fumes can be detected inside the vehicle; or when the underside or rear of the vehicle is damaged; have an authorized technician inspect the complete exhaust system and adjacent body areas for broken, damaged, deteriorated, or mispositioned parts. Open seams or loose connections could permit exhaust fumes to seep into the passenger compartment. In addition, have the exhaust system inspected each time the vehicle is raised for lubrication or oil change. Replace as required.

WARNING!

- **Exhaust gases can injure or kill. They contain carbon monoxide (CO), which is colorless and odorless. Breathing it can make you unconscious and can eventually poison you. To avoid breathing CO, refer to "Safety Tips" in "Safety" for further information.**
- **A hot exhaust system can start a fire if you park over materials that can burn. Such materials might be grass or leaves coming into contact with your exhaust system. Do not park or operate your vehicle in areas where your exhaust system can contact anything that can burn.**

CAUTION!

- **The catalytic converter requires the use of unleaded fuel only. Leaded gasoline will destroy the effectiveness of the catalyst as an emissions control device and may seriously reduce engine performance and cause serious damage to the engine.**
- **Damage to the catalytic converter can result if your vehicle is not kept in proper operating condition. In**

(Continued)

CAUTION! *(Continued)*

the event of engine malfunction, particularly involving engine misfire or other apparent loss of performance, have your vehicle serviced promptly. Continued operation of your vehicle with a severe malfunction could cause the converter to overheat, resulting in possible damage to the converter and vehicle.

Under normal operating conditions, the catalytic converter will not require maintenance. However, it is important to keep the engine properly tuned to assure proper catalyst operation and prevent possible catalyst damage.

NOTE: Intentional tampering with emissions control systems can result in civil penalties being assessed against you.

In unusual situations involving grossly malfunctioning engine operation, a scorching odor may suggest severe and abnormal catalyst overheating. If this occurs, stop the vehicle, turn off the engine and allow it to cool. Service, including a tune-up to manufacturer's specifications, should be obtained immediately.

To minimize the possibility of catalytic converter damage:

- Do not interrupt the ignition when the transmission is in gear and the vehicle is in motion.
- Do not try to start the vehicle by pushing or towing the vehicle.
- Do not idle the engine with any ignition components disconnected or removed, such as when diagnostic testing, or for prolonged periods during very rough idle or malfunctioning operating conditions.

Cooling System

WARNING!

- **Turn vehicle off and disconnect the fan motor lead before working near the radiator cooling fan.**
- **You or others can be badly burned by hot engine coolant (antifreeze) or steam from your radiator. If you see or hear steam coming from under the hood, do not open the hood until the radiator has had time to cool. Never open a cooling system pressure cap when the radiator or coolant bottle is hot.**

(Continued)

WARNING! ***(Continued)***

- **Keep hands, tools, clothing, and jewelry away from the radiator cooling fan when the hood is raised. The fan starts automatically and may start at any time, whether the engine is running or not.**
- **When working near the radiator cooling fan, disconnect the fan motor lead or turn the ignition switch to the OFF position. The fan is temperature controlled and can start at any time the ignition switch is in the ON position.**
- **You or others can be badly burned by hot engine coolant (antifreeze) or steam from your radiator. If you see or hear steam coming from under the hood, do not open the hood until the radiator has had time to cool. Never try to open a cooling system pressure cap when the radiator is hot.**

Coolant Checks

Check engine coolant (antifreeze) protection every 12 months (before the onset of freezing weather, where applicable). If the engine coolant (antifreeze) is dirty or rusty in appearance, the system should be drained, flushed, and refilled with fresh engine coolant (antifreeze). Check the front of the A/C condenser for any accumulation of bugs, leaves, etc. If dirty, clean by gently spraying water from a garden hose vertically down the face of the condenser.

Check the coolant recovery bottle tubing for brittle rubber, cracking, tears, cuts, and tightness of the connection at the bottle and radiator. Inspect the entire system for leaks.

Cooling System — Drain, Flush And Refill

NOTE: Some vehicles require special tools to add coolant properly. Failure to fill these systems properly could lead to severe internal engine damage. If any coolant is needed to be added to the system please contact your local authorized dealer.

If the engine coolant (antifreeze) is dirty or contains visible sediment, have an authorized dealer clean and flush with OAT coolant (antifreeze) (conforming to MS.90032).

Refer to the “Maintenance Plan” in this section for the proper maintenance intervals.

Selection Of Coolant

Refer to “Fluids And Lubricants” in “Technical Specifications” for further information.

CAUTION!

- **Mixing of engine coolant (antifreeze) other than specified Organic Additive Technology (OAT) engine coolant (antifreeze), may result in engine damage and may decrease corrosion protection. Organic Additive Technology (OAT) engine coolant is different and should not be mixed with Hybrid Organic Additive Technology (HOAT) engine coolant (antifreeze) or any "globally compatible" coolant (antifreeze). If a non-OAT engine coolant (antifreeze) is introduced into the cooling system in an emergency, the cooling system will need to be drained, flushed, and refilled with fresh OAT coolant (conforming to MS.90032), by an authorized dealer as soon as possible.**
- **Do not use water alone or alcohol-based engine coolant (antifreeze) products. Do not use additional rust inhibitors or antirust products, as they may not be compatible with the radiator engine coolant and may plug the radiator.**
- **This vehicle has not been designed for use with propylene glycol-based engine coolant (antifreeze). Use of propylene glycol-based engine coolant (antifreeze) is not recommended.**

Adding Coolant

Your vehicle has been built with an improved engine coolant (OAT coolant conforming to MS.90032) that allows extended maintenance intervals. This engine coolant (antifreeze) can be used up to ten years or 150,000 miles (240,000 km) before replacement. To prevent reducing this extended maintenance period, it is important that you use the same engine coolant (OAT coolant conforming to MS.90032) throughout the life of your vehicle.

Please review these recommendations for using Organic Additive Technology (OAT) engine coolant (antifreeze) that meets the requirements of FCA Material Standard MS.90032. When adding engine coolant (antifreeze):

- We recommend using Mopar Antifreeze/Coolant 10 Year/150,000 Mile Formula OAT (Organic Additive Technology) that meets the requirements of FCA Material Standard MS.90032.
- Mix a minimum solution of 50% OAT engine coolant that meets the requirements of FCA Material Standard MS.90032 and distilled water. Use higher concentrations (not to exceed 70%) if temperatures below –34°F (–37°C) are anticipated. Please contact your authorized dealer for assistance.

- Use only high purity water such as distilled or deionized water when mixing the water/engine coolant (antifreeze) solution. The use of lower quality water will reduce the amount of corrosion protection in the engine cooling system.

NOTE:

- It is the owner's responsibility to maintain the proper level of protection against freezing according to the temperatures occurring in the area where the vehicle is operated.
- Some vehicles require special tools to add coolant properly. Failure to fill these systems properly could lead to severe internal engine damage. If any coolant is needed to be added to the system, please contact your local authorized dealer.
- Mixing engine coolant (antifreeze) types is not recommended and can result in cooling system damage. If HOAT and OAT coolant are mixed in an emergency, have a authorized dealer drain, flush, and refill with OAT coolant (conforming to MS.90032) as soon as possible.

Cooling System Pressure Cap

The cap must be fully tightened to prevent loss of engine coolant (antifreeze), and to ensure that engine coolant (antifreeze) will return to the radiator from the coolant recovery tank.

The cap should be inspected and cleaned if there is any accumulation of foreign material on the sealing surfaces.

WARNING!

- **Do not open hot engine cooling system. Never add engine coolant (antifreeze) when the engine is overheated. Do not loosen or remove the cap to cool an overheated engine. Heat causes pressure to build up in the cooling system. To prevent scalding or injury, do not remove the pressure cap while the system is hot or under pressure.**
- **Do not use a pressure cap other than the one specified for your vehicle. Personal injury or engine damage may result.**

Disposal Of Used Coolant

Used ethylene glycol-based coolant (antifreeze) is a regulated substance requiring proper disposal. Check with your local authorities to determine the disposal rules for your community. To prevent ingestion by animals or children, do not store ethylene glycol-based coolant in open containers or allow it to remain in puddles on the ground. If ingested by a child or pet, seek emergency assistance immediately. Clean up any ground spills immediately.

Coolant Level

The coolant expansion bottle provides a quick visual method for determining that the coolant level is adequate. With the engine off and cold, the level of the coolant (antifreeze) in the bottle should be between the "MAX" and "MIN" lines marked on the bottle.

As long as the engine operating temperature is satisfactory, the coolant bottle need only be checked once a month.

When additional coolant (antifreeze) is needed to maintain the proper level, it should be added to the coolant bottle. Do not overfill.

See your authorized dealer for service

Points To Remember

NOTE: When the vehicle is stopped after a few miles/kilometers of operation, you may observe vapor coming from the front of the engine compartment. This is normally a result of moisture from rain, snow, or high humidity accumulating on the radiator and being vaporized when the thermostat opens, allowing hot engine coolant (antifreeze) to enter the radiator.

If an examination of your engine compartment shows no evidence of radiator or hose leaks, the vehicle may be safely driven. The vapor will soon dissipate.

- Do not overfill the coolant expansion bottle.
- Check the coolant freeze point in the radiator and in the coolant expansion bottle. If engine coolant (antifreeze) needs to be added, the contents of the coolant expansion bottle must also be protected against freezing.
- If frequent engine coolant (antifreeze) additions are required, the cooling system should be pressure tested for leaks.
- Maintain engine coolant (antifreeze) concentration at a minimum of 50% OAT coolant (conforming to

MS.90032) and distilled water for proper corrosion protection of your engine which contains aluminum components.

- Keep the front of the radiator clean. If your vehicle is equipped with air conditioning, keep the front of the condenser clean.
- Do not change the thermostat for Summer or Winter operation. If replacement is ever necessary, install ONLY the correct type thermostat. Other designs may result in unsatisfactory engine coolant (antifreeze) performance, poor gas mileage, and increased emissions.

Brake System

In order to assure brake system performance, all brake system components should be inspected periodically. Refer to the "Maintenance Plan" for the proper maintenance intervals.

WARNING!

Riding the brakes can lead to brake failure and possibly a collision. Driving with your foot resting or riding on the brake pedal can result in abnormally high brake

(Continued)

WARNING! *(Continued)*

temperatures, excessive lining wear, and possible brake damage. You would not have your full braking capacity in an emergency.

Brake Master Cylinder

The fluid level in the master cylinder should be checked when performing under hood services, or immediately if the brake system warning light is on.

Be sure to clean the top of the master cylinder area before removing the cap. If necessary, add fluid to bring the fluid level up to the requirements described on the brake fluid reservoir. Fluid level can be expected to fall as the brake pads wear. The brake fluid level should be checked when the pads are replaced. However, low fluid level may be caused by a leak and a checkup may be needed.

NOTE: If your vehicle is equipped with a **manual transmission**, the brake fluid reservoir supplies fluid to both the brake system and the clutch release system. The two systems are separated in the reservoir, and a leak in one system will not affect the other system. The **manual transmission** clutch release system should not require fluid replacement during the life of the vehicle. If the brake fluid reservoir is low and the brake system does not indicate any leaks or other problems, it may be a result of a leak in the hydraulic clutch release system. See your local authorized dealer for service.

Use only manufacturer's recommended brake fluid. Refer to "Fluids And Lubricants" in "Technical Specifications" for further information.

WARNING!

- **Use only manufacturer's recommended brake fluid. Refer to "Fluids And Lubricants" in "Technical Specifications" for further information. Using the wrong type of brake fluid can severely damage your brake system and/or impair its performance. The proper type of brake fluid for your vehicle is also identified on the original factory installed hydraulic master cylinder reservoir.**

(Continued)

WARNING! ***(Continued)***

- **To avoid contamination from foreign matter or moisture, use only new brake fluid or fluid that has been in a tightly closed container. Keep the master cylinder reservoir cap secured at all times. Brake fluid in a open container absorbs moisture from the air resulting in a lower boiling point. This may cause it to boil unexpectedly during hard or prolonged braking, resulting in sudden brake failure. This could result in a collision.**
- **Overfilling the brake fluid reservoir can result in spilling brake fluid on hot engine parts, causing the brake fluid to catch fire. Brake fluid can also damage painted and vinyl surfaces, care should be taken to avoid its contact with these surfaces.**
- **Do not allow petroleum based fluid to contaminate the brake fluid. Brake seal components could be damaged, causing partial or complete brake failure. This could result in a collision.**

CAUTION!

Use of improper brake fluids will affect overall clutch system performance. Improper brake fluids may damage the clutch system resulting in loss of clutch function and the ability to shift the transmission.

Manual Transmission — If Equipped

Lubricant Selection

Use only the manufacturers recommended transmission fluid. Refer to "Fluids And Lubricants" in "Technical Specifications" for further information.

Please see your authorized dealer for service.

Fluid Level Check

Check the fluid level by removing the fill plug. The fluid level should be between the bottom of the fill hole and a point not more than 3/16 inch (4.7 mm) below the bottom of the hole.

Add fluid, if necessary, to maintain the proper level.

Please see your authorized dealer for service.

Frequency Of Fluid Change

Under normal operating conditions, the fluid installed at the factory will give satisfactory lubrication for the life of the vehicle. Fluid changes are not necessary unless lubricant has become contaminated with water.

NOTE: If contaminated with water, the fluid should be changed immediately.

Automatic Transmission (Six-Speed) — If Equipped

Selection Of Lubricant (Six-Speed Transmission)

It is important to use the proper transmission fluid to ensure optimum transmission performance and life. Use only the manufacturer's specified transmission fluid. Refer to "Fluids And Lubricants" in "Technical Specifications" for fluid specifications. It is important to maintain the transmission fluid at the correct level using the recommended fluid.

No chemical flushes should be used in any transmission; only the approved lubricant should be used.

CAUTION!

Using a transmission fluid other than the manufacturer's recommended fluid may cause deterioration in transmission shift quality and/or torque converter shudder. Refer to "Fluids And Lubricants" in "Technical Specifications" for fluid specifications.

Special Additives

The manufacturer strongly recommends against using any special additives in the transmission.

Automatic Transmission Fluid (ATF) is an engineered product and its performance may be impaired by supplemental additives. Therefore, do not add any fluid additives to the transmission. The only exception to this policy is the use of special dyes for diagnosing fluid leaks. Avoid using transmission sealers as they may adversely affect seals.

CAUTION!

Do not use chemical flushes in your transmission as the chemicals can damage your transmission components. Such damage is not covered by the New Vehicle Limited Warranty.

Fluid Level Check

The fluid level is preset at the factory and does not require adjustment under normal operating conditions. Routine fluid level checks are not required, therefore the transmission filler tube is capped and no dipstick is provided. Your authorized dealer can check your transmission fluid level using special service tools. If you notice fluid leakage or transmission malfunction, visit you authorized dealer immediately to have the fluid level checked. Operating the vehicle with an improper fluid level can cause severe transmission damage.

CAUTION!

If a transmission fluid leak occurs, visit your authorized dealer immediately. Severe transmission damage may occur. Your authorized dealer has the proper tools to adjust the fluid level accurately.

Fluid And Filter Changes

Under normal operating conditions, the fluid installed at the factory will provide satisfactory lubrication for the life of the vehicle. However, if the vehicle is frequently driven on rough or unpaved roads, on mountain roads, on short trips, or in heavy city traffic during hot weather, or is used

for frequent trailer towing, police, fleet, taxi, etc., change the fluid as indicated in the Maintenance Schedule. In addition, change the fluid and filter if the fluid becomes contaminated (with water, etc.), or if the transmission is disassembled for any reason.

Automatic Transmission (CVT) — If Equipped

Selection Of Lubricant (CVT)

It is important to use the proper transmission fluid to ensure optimum transmission performance and life. Use only the manufacturer's specified transmission fluid which has the special friction coefficient additives necessary for proper steel belt traction on the drive and driven pulleys. Refer to "Fluids And Lubricants" in "Technical Specifications" for fluid specifications. It is important to maintain the transmission fluid at the correct level using the recommended fluid.

No chemical flushes should be used in any transmission; only the approved lubricant should be used.

CAUTION!

Using a transmission fluid other than the manufacturer's recommended fluid may cause belt slip and result in a complete transmission failure! Refer to "Fluids And Lubricants" in "Technical Specifications" for fluid specifications.

Special Additives

The manufacturer strongly recommends against using any special additives in the transmission.

Automatic Transmission Fluid (ATF) is an engineered product and its performance may be impaired by supplemental additives. Therefore, do not add any fluid additives to the transmission. The only exception to this policy is the use of special dyes for diagnosing fluid leaks. Avoid using transmission sealers as they may adversely affect seals.

CAUTION!

Do not use chemical flushes in your transmission as the chemicals can damage your transmission components. Such damage is not covered by the New Vehicle Limited Warranty.

Fluid Level Check

The fluid level is preset at the factory and does not require adjustment under normal operating conditions.

Routine fluid level checks are not required, therefore the transmission filler tube is capped and no dipstick is provided. Your authorized dealer can check your transmission fluid level using special service tools. If you notice fluid leakage or transmission malfunction, visit your authorized dealer immediately to have the transmission fluid level checked. Operating the vehicle with an improper fluid level can cause severe transmission damage.

CAUTION!

If a transmission fluid leak occurs, visit your authorized dealer immediately. Severe transmission damage may occur. Your authorized dealer has the proper tools to adjust the fluid level accurately.

Fluid And Filter Changes

Refer to the "Maintenance Plan" for the proper maintenance intervals. In addition, change the fluid and filter if the fluid becomes contaminated (with water, etc.), or if the transmission is disassembled for any reason.

Rear Drive Assembly (RDA) — AWD/4WD Models Only

Lubricant Selection

Use only the manufacturer's recommended transmission fluid. Refer to "Fluids And Lubricants" in "Technical Specifications" for further information.

Fluid Level Check

Visually inspect the unit at each oil change for leakage. If leakage is detected, check the fluid level by removing the fill plug. The fluid level should be maintained between the bottom of the fill hole to 1/8 inch (4 mm) below the fill hole.

Add fluid, if necessary, to maintain the proper level.

Frequency Of Fluid Change

Refer to the "Maintenance Plan" for the proper maintenance intervals.

Power Transfer Unit (PTU) — AWD/4WD Models Only

Lubricant Selection

Use only the manufacturer's recommended fluid. Refer to "Fluids And Lubricants" in "Technical Specifications" for further information.

Fluid Level Check

Visually inspect the unit at each oil change for leakage. If leakage is detected, Check the fluid level by removing the fill plug. The fluid level should be maintained between the bottom of the fill hole to 1/8 inch (4 mm) below the fill hole.

Add fluid, if necessary, to maintain the proper level.

Frequency Of Fluid Change

Refer to the "Maintenance Plan" for the proper maintenance intervals.

RAISING THE VEHICLE

In the case where it is necessary to raise the vehicle, go to an authorized dealer or service station.

TIRES

Tire Safety Information

Tire safety information will cover aspects of the following information: Tire Markings, Tire Identification Numbers, Tire Terminology and Definitions, Tire Pressures, and Tire Loading.

Tire Markings

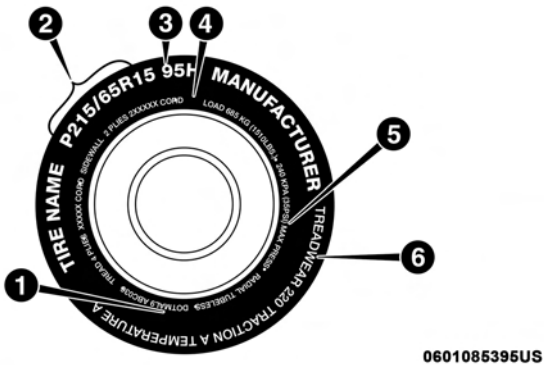

Tire Markings

1 — U.S. DOT Safety Standards Code (TIN)	4 — Maximum Load
2 — Size Designation	5 — Maximum Pressure
3 — Service Description	6 — Treadwear, Traction and Temperature Grades

NOTE:

- P (Passenger) — Metric tire sizing is based on U.S. design standards. P-Metric tires have the letter "P" molded into the sidewall preceding the size designation. Example: P215/65R15 95H.
- European — Metric tire sizing is based on European design standards. Tires designed to this standard have the tire size molded into the sidewall beginning with the section width. The letter "P" is absent from this tire size designation. Example: 215/65R15 96H.
- LT (Light Truck) — Metric tire sizing is based on U.S. design standards. The size designation for LT-Metric tires is the same as for P-Metric tires except for the letters "LT" that are molded into the sidewall preceding the size designation. Example: LT235/85R16.
- Temporary spare tires are designed for temporary emergency use only. Temporary high pressure compact spare tires have the letter "T" or "S" molded into the sidewall preceding the size designation. Example: T145/80D18 103M.
- High flotation tire sizing is based on U.S. design standards and it begins with the tire diameter molded into the sidewall. Example: 31x10.5 R15 LT.

Tire Identification Number (TIN)

The TIN may be found on one or both sides of the tire; however, the date code may only be on one side. Tires with white sidewalls will have the full TIN, including the date code, located on the white sidewall side of the tire. Look for the TIN on the outboard side of black sidewall tires as mounted on the vehicle. If the TIN is not found on the outboard side, then you will find it on the inboard side of the tire.

EXAMPLE:
DOT MA L9 ABCD 0301
DOT = Department of Transportation – This symbol certifies that the tire is in compliance with the U.S. Department of Transportation tire safety standards and is approved for highway use
MA = Code representing the tire manufacturing location (two digits)
L9 = Code representing the tire size (two digits)
ABCD = Code used by the tire manufacturer (one to four digits)
03 = Number representing the week in which the tire was manufactured (two digits) – 03 means the 3rd week
01 = Number representing the year in which the tire was manufactured (two digits) – 01 means the year 2001 – Prior to July 2000, tire manufacturers were only required to have one number to represent the year in which the tire was manufactured. Example: 031 could represent the 3rd week of 1981 or 1991

Tire Terminology And Definitions

Term	Definition
B-Pillar	The vehicle B-Pillar is the structural member of the body located behind the front door.
Cold Tire Inflation Pressure	Cold tire inflation pressure is defined as the tire pressure after the vehicle has not been driven for at least three hours, or driven less than 1 mile (1.6 km) after sitting for a minimum of three hours. Inflation pressure is measured in units of PSI (pounds per square inch) or kPa (kilopascals).
Maximum Inflation Pressure	The maximum inflation pressure is the maximum permissible cold tire inflation pressure for this tire. The maximum inflation pressure is molded into the sidewall.
Recommended Cold Tire Inflation Pressure	Vehicle manufacturer's recommended cold tire inflation pressure as shown on the tire placard.
Tire Placard	A label permanently attached to the vehicle describing the vehicle's loading capacity, the original equipment tire sizes and the recommended cold tire inflation pressures.

Tire Loading And Tire Pressure

NOTE: The proper cold tire inflation pressure is listed on the driver's side B-Pillar or the rear edge of the driver's side door.

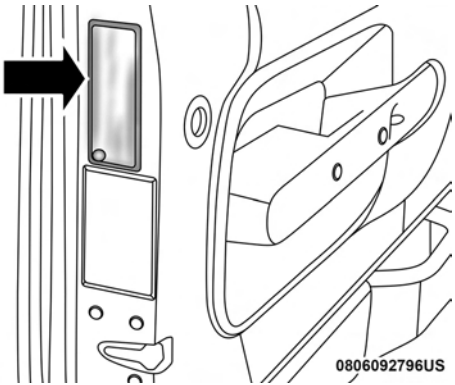

Example Tire Placard Location (Door)

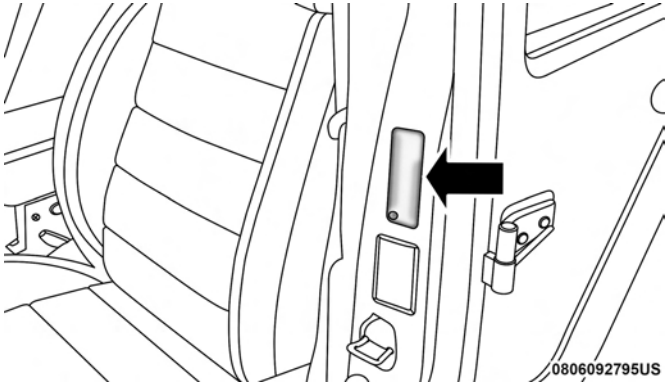

Example Tire Placard Location (B-Pillar)

Tire And Loading Information Placard

Tire And Loading Information Placard

This placard tells you important information about the:

1. Number of people that can be carried in the vehicle.
2. Total weight your vehicle can carry.
3. Tire size designed for your vehicle.
4. Cold tire inflation pressures for the front, rear, and spare tires.

Loading

The vehicle maximum load on the tire must not exceed the load carrying capacity of the tire on your vehicle. You will not exceed the tire's load carrying capacity if you adhere to the loading conditions, tire size, and cold tire inflation pressures specified on the Tire and Loading Information placard in "Vehicle Loading" in the "Starting And Operating" section of this manual.

NOTE: Under a maximum loaded vehicle condition, gross axle weight ratings (GAWRs) for the front and rear axles must not be exceeded.

For further information on GAWRs, vehicle loading, and trailer towing, refer to "Vehicle Loading" in the "Starting And Operating" section of this manual.

To determine the maximum loading conditions of your vehicle, locate the statement "The combined weight of occupants and cargo should never exceed XXX kg or XXX lbs" on the Tire and Loading Information placard. The combined weight of occupants, cargo/luggage and trailer tongue weight (if applicable) should never exceed the weight referenced here.

Steps For Determining Correct Load Limit—

(1) Locate the statement "The combined weight of occupants and cargo should never exceed XXX kg or XXX lbs." on your vehicle's placard.

(2) Determine the combined weight of the driver and passengers that will be riding in your vehicle.

(3) Subtract the combined weight of the driver and passengers from XXX kg or XXX lbs.

(4) The resulting figure equals the available amount of cargo and luggage load capacity. For example, if "XXX" amount equals 1400 lbs. and there will be five 150 lb passengers in your vehicle, the amount of available cargo and luggage load capacity is 650 lbs. (1400-750 (5x150) = 650 lbs.)

(5) Determine the combined weight of luggage and cargo being loaded on the vehicle. That weight may not safely exceed the available cargo and luggage load capacity calculated in Step 4.

(6) If your vehicle will be towing a trailer, load from your trailer will be transferred to your vehicle. Consult this manual to determine how this reduces the available cargo and luggage load capacity of your vehicle.

Metric Example For Load Limit

For example, if "XXX" amount equals 635 kg and there will be five 68 kg passengers in your vehicle, the amount of available cargo and luggage load capacity is 295 kg (635-340 (5x68) = 295 kg) as shown in step 4.

NOTE:

- If your vehicle will be towing a trailer, load from your trailer will be transferred to your vehicle. The following table shows examples on how to calculate total load, cargo/luggage, and towing capacities of your vehicle with varying seating configurations and number and size of occupants. This table is for illustration purposes only and may not be accurate for the seating and load carry capacity of your vehicle.
- For the following example, the combined weight of occupants and cargo should never exceed 865 lbs (392 kg).

Occupants			Combined weight of occupants and cargo from Tire Placard	MINUS	Combined Occupant's weight	=	AVAILABLE Cargo/Luggage and Trailer Tongue Weight
TOTAL	FRONT	REAR					
EXAMPLE 1							
5	2	3			Occupant 1: 200 lbs Occupant 2: 130 lbs Occupant 3: 160 lbs Occupant 4: 100 lbs Occupant 5: 80 lbs TOTAL WEIGHT: 670 lbs		
			865 lbs	minus	670 lbs	=	195 lbs
EXAMPLE 2							
3	2	1			Occupant 1: 210 lbs Occupant 2: 180 lbs Occupant 3: 150 lbs TOTAL WEIGHT: 540 lbs		
			865 lbs	minus	540 lbs	=	325 lbs
EXAMPLE 3							
2	2	0			Occupant 1: 200 lbs Occupant 2: 200 lbs TOTAL WEIGHT: 400 lbs		
			865 lbs	minus	400 lbs	=	465 lbs

EXAMPLE

811a4d11

WARNING!

Overloading of your tires is dangerous. Overloading can cause tire failure, affect vehicle handling, and increase your stopping distance. Use tires of the recommended load capacity for your vehicle. Never overload them.

Tires — General Information

Tire Pressure

Proper tire inflation pressure is essential to the safe and satisfactory operation of your vehicle. Four primary areas are affected by improper tire pressure:

- Safety and Vehicle Stability
- Economy
- Tread Wear
- Ride Comfort

Safety

WARNING!

- **Improperly inflated tires are dangerous and can cause collisions.**
- **Underinflation increases tire flexing and can result in overheating and tire failure.**
- **Overinflation reduces a tire's ability to cushion shock. Objects on the road and chuckholes can cause damage that result in tire failure.**

(Continued)

WARNING! *(Continued)*

- **Overinflated or underinflated tires can affect vehicle handling and can fail suddenly, resulting in loss of vehicle control.**
- **Unequal tire pressures can cause steering problems. You could lose control of your vehicle.**
- **Unequal tire pressures from one side of the vehicle to the other can cause the vehicle to drift to the right or left.**
- **Always drive with each tire inflated to the recommended cold tire inflation pressure.**

Both under-inflation and over-inflation affect the stability of the vehicle and can produce a feeling of sluggish response or over responsiveness in the steering.

NOTE:

- Unequal tire pressures from side to side may cause erratic and unpredictable steering response.
- Unequal tire pressure from side to side may cause the vehicle to drift left or right.

Fuel Economy

Underinflated tires will increase tire rolling resistance resulting in higher fuel consumption.

Tread Wear

Improper cold tire inflation pressures can cause abnormal wear patterns and reduced tread life, resulting in the need for earlier tire replacement.

Ride Comfort And Vehicle Stability

Proper tire inflation contributes to a comfortable ride. Over-inflation produces a jarring and uncomfortable ride.

Tire Inflation Pressures

The proper cold tire inflation pressure is listed on the driver's side B-Pillar or rear edge of the driver's side door.

At least once a month:

- Check and adjust tire pressure with a good quality pocket-type pressure gauge. Do not make a visual judgement when determining proper inflation. Tires may look properly inflated even when they are under-inflated.
- Inspect tires for signs of tire wear or visible damage.

CAUTION!

After inspecting or adjusting the tire pressure, always reinstall the valve stem cap. This will prevent moisture and dirt from entering the valve stem, which could damage the valve stem.

Inflation pressures specified on the placard are always "cold tire inflation pressure". Cold tire inflation pressure is defined as the tire pressure after the vehicle has not been driven for at least three hours, or driven less than 1 mile (1.6 km) after sitting for a minimum of three hours. The cold tire inflation pressure must not exceed the maximum inflation pressure molded into the tire sidewall.

Check tire pressures more often if subject to a wide range of outdoor temperatures, as tire pressures vary with temperature changes.

Tire pressures change by approximately 1 psi (7 kPa) per 12°F (7°C) of air temperature change. Keep this in mind when checking tire pressure inside a garage, especially in the Winter.

Example: If garage temperature = 68°F (20°C) and the outside temperature = 32°F (0°C) then the cold tire inflation

pressure should be increased by 3 psi (21 kPa), which equals 1 psi (7 kPa) for every 12°F (7°C) for this outside temperature condition.

Tire pressure may increase from 2 to 6 psi (13 to 40 kPa) during operation. DO NOT reduce this normal pressure build up or your tire pressure will be too low.

Tire Pressures For High Speed Operation

The manufacturer advocates driving at safe speeds and within posted speed limits. Where speed limits or conditions are such that the vehicle can be driven at high speeds, maintaining correct tire inflation pressure is very important. Increased tire pressure and reduced vehicle loading may be required for high-speed vehicle operation. Refer to your authorized tire dealer or original equipment vehicle dealer for recommended safe operating speeds, loading and cold tire inflation pressures.

WARNING!

High speed driving with your vehicle under maximum load is dangerous. The added strain on your tires could cause them to fail. You could have a serious collision. Do not drive a vehicle loaded to the maximum capacity at continuous speeds above 75 mph (120 km/h).

Radial Ply Tires

WARNING!

Combining radial ply tires with other types of tires on your vehicle will cause your vehicle to handle poorly. The instability could cause a collision. Always use radial ply tires in sets of four. Never combine them with other types of tires.

Tire Repair

If your tire becomes damaged, it may be repaired if it meets the following criteria:

- The tire has not been driven on when flat.
- The damage is only on the tread section of your tire (sidewall damage is not repairable).
- The puncture is no greater than a ¼ of an inch (6 mm).

Consult an authorized tire dealer for tire repairs and additional information.

Damaged Run Flat tires, or Run Flat tires that have experienced a loss of pressure should be replaced immediately with another Run Flat tire of identical size and service description (Load Index and Speed Symbol).

Run Flat Tires — If Equipped

Run Flat tires allow you the capability to drive 50 miles (80 km) at 50 mph (80 km/h) after a rapid loss of inflation pressure. This rapid loss of inflation is referred to as the Run Flat mode. A Run Flat mode occurs when the tire inflation pressure is of/or below 14 psi (96 kPa). Once a Run Flat tire reaches the run flat mode it has limited driving capabilities and needs to be replaced immediately. A Run Flat tire is not repairable.

It is not recommended driving a vehicle loaded at full capacity or to tow a trailer while a tire is in the run flat mode.

See the tire pressure monitoring section for more information.

Tire Spinning

When stuck in mud, sand, snow, or ice conditions, do not spin your vehicle's wheels above 30 mph (48 km/h) or for longer than 30 seconds continuously without stopping.

Refer to "Freeing A Stuck Vehicle" in "In Case Of Emergency" for further information.

WARNING!

Fast spinning tires can be dangerous. Forces generated by excessive wheel speeds may cause tire damage or failure. A tire could explode and injure someone. Do not spin your vehicle's wheels faster than 30 mph (48 km/h) for more than 30 seconds continuously when you are stuck, and do not let anyone near a spinning wheel, no matter what the speed.

Tread Wear Indicators

Tread wear indicators are in the original equipment tires to help you in determining when your tires should be replaced.

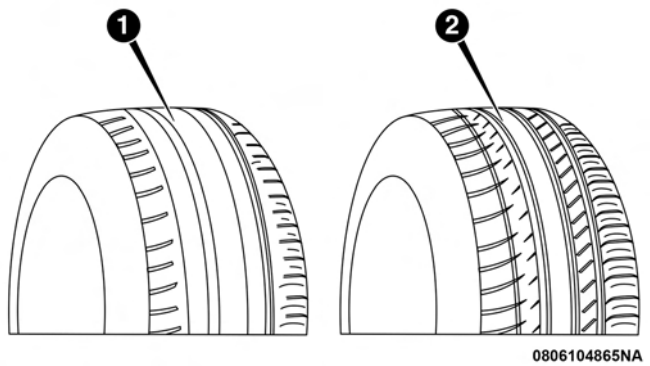

Tire Tread

1 — Worn Tire
2 — New Tire

These indicators are molded into the bottom of the tread grooves. They will appear as bands when the tread depth becomes a 1/16 of an inch (1.6 mm). When the tread is worn to the tread wear indicators, the tire should be replaced. Refer to "Replacement Tires" in this section for further information.

Life Of Tire

The service life of a tire is dependent upon varying factors including, but not limited to:

- Driving style.
- Tire pressure - Improper cold tire inflation pressures can cause uneven wear patterns to develop across the tire tread. These abnormal wear patterns will reduce tread life, resulting in the need for earlier tire replacement.
- Distance driven.
- Performance tires, tires with a speed rating of V or higher, and Summer tires typically have a reduced tread life. Rotation of these tires per the vehicle maintenance schedule is highly recommended.

WARNING!

Tires and the spare tire should be replaced after six years, regardless of the remaining tread. Failure to follow this warning can result in sudden tire failure. You could lose control and have a collision resulting in serious injury or death.

Keep dismounted tires in a cool, dry place with as little exposure to light as possible. Protect tires from contact with oil, grease, and gasoline.

Replacement Tires

The tires on your new vehicle provide a balance of many characteristics. They should be inspected regularly for wear and correct cold tire inflation pressures. The manufacturer strongly recommends that you use tires equivalent to the originals in size, quality and performance when replacement is needed. Refer to the paragraph on "Tread Wear Indicators" in this section. Refer to the Tire and Loading Information placard or the Vehicle Certification Label for the size designation of your tire. The Load Index and Speed Symbol for your tire will be found on the original equipment tire sidewall.

See the Tire Sizing Chart example found in the "Tire Safety Information" section of this manual for more information relating to the Load Index and Speed Symbol of a tire.

It is recommended to replace the two front tires or two rear tires as a pair. Replacing just one tire can seriously affect your vehicle's handling. If you ever replace a wheel, make sure that the wheel's specifications match those of the original wheels.

It is recommended you contact your authorized tire dealer or original equipment dealer with any questions you may have on tire specifications or capability. Failure to use equivalent replacement tires may adversely affect the safety, handling, and ride of your vehicle.

WARNING!

- **Do not use a tire, wheel size, load rating, or speed rating other than that specified for your vehicle. Some combinations of unapproved tires and wheels may change suspension dimensions and performance characteristics, resulting in changes to steering, handling, and braking of your vehicle. This can cause unpredictable handling and stress to steering and suspension components. You could lose control and have a collision resulting in serious injury or death. Use only the tire and wheel sizes with load ratings approved for your vehicle.**
- **Never use a tire with a smaller load index or capacity, other than what was originally equipped on your vehicle. Using a tire with a smaller load index could result in tire overloading and failure. You could lose control and have a collision.**

(Continued)

WARNING! *(Continued)*

- **Failure to equip your vehicle with tires having adequate speed capability can result in sudden tire failure and loss of vehicle control.**

CAUTION!

Replacing original tires with tires of a different size may result in false speedometer and odometer readings.

Tire Types

All Season Tires — If Equipped

All Season tires provide traction for all seasons (Spring, Summer, Fall, and Winter). Traction levels may vary between different all season tires. All season tires can be identified by the M+S, M&S, M/S or MS designation on the tire sidewall. Use all season tires only in sets of four; failure to do so may adversely affect the safety and handling of your vehicle.

Summer Or Three Season Tires — If Equipped

Summer tires provide traction in both wet and dry conditions, and are not intended to be driven in snow or on ice. If your vehicle is equipped with Summer tires, be aware these tires are not designed for Winter or cold driving conditions. Install Winter tires on your vehicle when ambient temperatures are less than 40°F (5°C) or if roads are covered with ice or snow. For more information, contact an authorized dealer.

Summer tires do not contain the all season designation or mountain/snowflake symbol on the tire sidewall. Use Summer tires only in sets of four; failure to do so may adversely affect the safety and handling of your vehicle.

WARNING!

Do not use Summer tires in snow/ice conditions. You could lose vehicle control, resulting in severe injury or death. Driving too fast for conditions also creates the possibility of loss of vehicle control.

Snow Tires

Some areas of the country require the use of snow tires during the Winter. Snow tires can be identified by a "mountain/snowflake" symbol on the tire sidewall.

If you need snow tires, select tires equivalent in size and type to the original equipment tires. Use snow tires only in sets of four; failure to do so may adversely affect the safety and handling of your vehicle.

Snow tires generally have lower speed ratings than what was originally equipped with your vehicle and should not be operated at sustained speeds over 75 mph (120 km/h). For speeds above 75 mph (120 km/h) refer to original equipment or an authorized tire dealer for recommended safe operating speeds, loading and cold tire inflation pressures.

While studded tires improve performance on ice, skid and traction capability on wet or dry surfaces may be poorer than that of non-studded tires. Some states prohibit studded tires; therefore, local laws should be checked before using these tire types.

Spare Tires — If Equipped

NOTE: For vehicles equipped with Tire Service Kit instead of a spare tire, please refer to "Tire Service Kit" in "In Case Of Emergency" for further information.

CAUTION!

Because of the reduced ground clearance, do not take your vehicle through an automatic car wash with a compact or limited use temporary spare installed. Damage to the vehicle may result.

Spare Tire Matching Original Equipped Tire And Wheel — If Equipped

Your vehicle may be equipped with a spare tire and wheel equivalent in look and function to the original equipment tire and wheel found on the front or rear axle of your vehicle. This spare tire may be used in the tire rotation for your vehicle. If your vehicle has this option, refer to an authorized tire dealer for the recommended tire rotation pattern.

Compact Spare Tire — If Equipped

The compact spare is for temporary emergency use only. You can identify if your vehicle is equipped with a compact

spare by looking at the spare tire description on the Tire and Loading Information Placard located on the driver's side door opening or on the sidewall of the tire. Compact spare tire descriptions begin with the letter "T" or "S" preceding the size designation. Example: T145/80D18 103M.

T, S = Temporary Spare Tire

Since this tire has limited tread life, the original equipment tire should be repaired (or replaced) and reinstalled on your vehicle at the first opportunity.

Do not install a wheel cover or attempt to mount a conventional tire on the compact spare wheel, since the wheel is designed specifically for the compact spare tire. Do not install more than one compact spare tire and wheel on the vehicle at any given time.

WARNING!

Compact and collapsible spares are for temporary emergency use only. With these spares, do not drive more than 50 mph (80 km/h). Temporary use spares have limited tread life. When the tread is worn to the tread wear indicators, the temporary use spare tire

(Continued)

WARNING! ***(Continued)***

needs to be replaced. Be sure to follow the warnings, which apply to your spare. Failure to do so could result in spare tire failure and loss of vehicle control.

Full Size Spare — If Equipped

The full size spare is for temporary emergency use only. This tire may look like the originally equipped tire on the front or rear axle of your vehicle, but it is not. This spare tire may have limited tread life. When the tread is worn to the tread wear indicators, the temporary use full size spare tire needs to be replaced. Since it is not the same as your original equipment tire, replace (or repair) the original equipment tire and reinstall on the vehicle at the first opportunity.

Limited Use Spare — If Equipped

The limited use spare tire is for temporary emergency use only. This tire is identified by a label located on the limited use spare wheel. This label contains the driving limitations for this spare. This tire may look like the original equipped tire on the front or rear axle of your vehicle, but it is not. Installation of this limited use spare tire affects vehicle

handling. Since it is not the same as your original equipment tire, replace (or repair) the original equipment tire and reinstall on the vehicle at the first opportunity.

WARNING!

Limited use spares are for emergency use only. Installation of this limited use spare tire affects vehicle handling. With this tire, do not drive more than the speed listed on the limited use spare wheel. Keep inflated to the cold tire inflation pressures listed on your Tire and Loading Information Placard located on the driver's side B-Pillar or the rear edge of the driver's side door. Replace (or repair) the original equipment tire at the first opportunity and reinstall it on your vehicle. Failure to do so could result in loss of vehicle control.

Wheel And Wheel Trim Care

All wheels and wheel trim, especially aluminum and chrome plated wheels, should be cleaned regularly using mild (neutral Ph) soap and water to maintain their luster and to prevent corrosion. Wash wheels with the same soap solution recommended for the body of the vehicle.

Your wheels are susceptible to deterioration caused by salt, sodium chloride, magnesium chloride, calcium chloride, etc., and other road chemicals used to melt ice or control dust on dirt roads. Use a soft cloth or sponge and mild soap to wipe away promptly. Do not use harsh chemicals or a stiff brush. They can damage the wheel's protective coating that helps keep them from corroding and tarnishing.

NOTE: Many aftermarket wheel cleaners contain strong acids or strong alkaline additives that can harm the wheel surface.

CAUTION!

Avoid products or automatic car washes that use acidic solutions or strong alkaline additives or harsh brushes. These products and automatic car washes may damage the wheel's protective finish. Such damage is not covered by the New Vehicle Limited Warranty. Only car wash soap, Mopar Wheel Cleaner or equivalent is recommended.

When cleaning extremely dirty wheels including excessive brake dust, care must be taken in the selection of tire and wheel cleaning chemicals and equipment to prevent damage to the wheels. Mopar Wheel Treatment or Mopar Chrome Cleaner or their equivalent is recommended or select a non-abrasive, non-acidic cleaner for aluminum or chrome wheels. Do not use any products on Dark Vapor or Black Satin Chrome Wheels. They will permanently damage this finish and such damage is not covered by the New Vehicle Limited Warranty.

CAUTION!

Do not use scouring pads, steel wool, a bristle brush, metal polishes or oven cleaner. These products may damage the wheel's protective finish. Such damage is not covered by the New Vehicle Limited Warranty. Only car wash soap, Mopar Wheel Cleaner or equivalent is recommended.

NOTE: If you intend parking or storing your vehicle for an extended period after cleaning the wheels with wheel cleaner, drive your vehicle for a few minutes before doing so. Driving the vehicle and applying the brakes when stopping will reduce the risk of brake rotor corrosion.

Dark Vapor Or Black Satin Chrome Wheels

CAUTION!

If your vehicle is equipped with Dark Vapor or Black Satin Chrome wheels DO NOT USE wheel cleaners, abrasives or polishing compounds. They will permanently damage this finish and such damage is not covered by the New Vehicle Limited Warranty. USE ONLY MILD SOAP AND WATER WITH A SOFT CLOTH. Used on a regular basis; this is all that is required to maintain this finish.

Tire Chains (Traction Devices)

Due to limited clearance, tire chains or traction devices are not recommended.

CAUTION!

Damage to the vehicle may result if tire chains are used.

Tire Rotation Recommendations

The tires on the front and rear of your vehicle operate at different loads and perform different steering, driving, and braking functions. For these reasons, they wear at unequal rates.

These effects can be reduced by timely rotation of tires. The benefits of rotation are especially worthwhile with aggressive tread designs such as those on all season type tires. Rotation will increase tread life, help to maintain mud, snow and wet traction levels, and contribute to a smooth, quiet ride.

Refer to the "Maintenance Plan" for the proper maintenance intervals. The reasons for any rapid or unusual wear should be corrected prior to rotation being performed.

The suggested rotation method is the "forward cross" shown in the following diagram. This rotation pattern does not apply to some directional tires that must not be reversed.

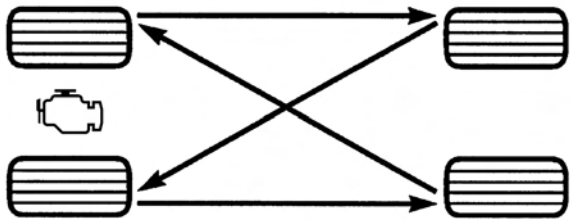

Tire Rotation

DEPARTMENT OF TRANSPORTATION UNIFORM TIRE QUALITY GRADES

The following tire grading categories were established by the National Highway Traffic Safety Administration. The specific grade rating assigned by the tire's manufacturer in each category is shown on the sidewall of the tires on your vehicle.

All passenger vehicle tires must conform to Federal safety requirements in addition to these grades.

Treadwear

The Treadwear grade is a comparative rating, based on the wear rate of the tire when tested under controlled conditions on a specified government test course. For example, a tire graded 150 would wear one and one-half times as well on the government course as a tire graded 100. The relative performance of tires depends upon the actual conditions of their use, however, and may depart significantly from the norm due to variations in driving habits, service practices, and differences in road characteristics and climate.

Traction Grades

The Traction grades, from highest to lowest, are AA, A, B, and C. These grades represent the tire's ability to stop on wet pavement, as measured under controlled conditions on specified government test surfaces of asphalt and concrete. A tire marked C may have poor traction performance.

WARNING!

The traction grade assigned to this tire is based on straight-ahead braking traction tests, and does not include acceleration, cornering, hydroplaning, or peak traction characteristics.

Temperature Grades

The Temperature grades are A (the highest), B, and C, representing the tire's resistance to the generation of heat and its ability to dissipate heat, when tested under controlled conditions on a specified indoor laboratory test wheel.

Sustained high temperature can cause the material of the tire to degenerate and reduce tire life, and excessive temperature can lead to sudden tire failure. The grade C corresponds to a level of performance, which all passenger vehicle tires must meet under the Federal Motor Vehicle Safety Standard No. 109. Grades B and A represent higher levels of performance on the laboratory test wheel, than the minimum required by law.

WARNING!

The temperature grade for this tire is established for a tire that is properly inflated and not overloaded. Excessive speed, under-inflation, or excessive loading, either separately or in combination, can cause heat buildup and possible tire failure.

STORING THE VEHICLE

If you will not be using your vehicle for more than 21 days, you may want to take steps to preserve your battery.

- Disengage the mini-fuse in the Power Distribution Center labeled IOD (Ignition Off-Draw).
- Or disconnect the negative cable from the battery.
- Anytime you store your vehicle, or keep it out of service (i.e., vacation) for two weeks or more, run the air conditioning system at idle for about five minutes in the fresh air and high blower setting. This will ensure adequate system lubrication to minimize the possibility of compressor damage when the system is started again.

BODYWORK

Protection From Atmospheric Agents

Vehicle body care requirements vary according to geographic locations and usage. Chemicals that make roads passable in snow and ice and those that are sprayed on trees and road surfaces during other seasons are highly corrosive to the metal in your vehicle. Outside parking, which exposes your vehicle to airborne contaminants, road surfaces on which the vehicle is operated, extreme hot or cold weather and other extreme conditions will have an adverse effect on paint, metal trim, and underbody protection.

The following maintenance recommendations will enable you to obtain maximum benefit from the corrosion resistance built into your vehicle.

What Causes Corrosion?

Corrosion is the result of deterioration or removal of paint and protective coatings from your vehicle.

The most common causes are:

- Road salt, dirt and moisture accumulation.
- Stone and gravel impact.
- Insects, tree sap and tar.

- Salt in the air near seacoast localities.
- Atmospheric fallout/industrial pollutants.

Body And Underbody Maintenance

Cleaning Headlights

Your vehicle is equipped with plastic headlights and fog lights that are lighter and less susceptible to stone breakage than glass headlights.

Plastic is not as scratch resistant as glass and therefore different lens cleaning procedures must be followed.

To minimize the possibility of scratching the lenses and reducing light output, avoid wiping with a dry cloth. To remove road dirt, wash with a mild soap solution followed by rinsing.

Do not use abrasive cleaning components, solvents, steel wool or other aggressive material to clean the lenses.

Preserving The Bodywork

Washing

- Wash your vehicle regularly. Always wash your vehicle in the shade using Mopar Car Wash, or a mild car wash soap, and rinse the panels completely with clear water.
- If insects, tar, or other similar deposits have accumulated on your vehicle, use Mopar Super Kleen Bug and Tar Remover to remove.
- Use a high quality cleaner wax, such as Mopar Cleaner Wax to remove road film, stains and to protect your paint finish. Take care never to scratch the paint.
- Avoid using abrasive compounds and power buffing that may diminish the gloss or thin out the paint finish.

CAUTION!

- **Do not use abrasive or strong cleaning materials such as steel wool or scouring powder that will scratch metal and painted surfaces.**
- **Use of power washers exceeding 1,200 psi (8,274 kPa) can result in damage or removal of paint and decals.**

Special Care

- If you drive on salted or dusty roads or if you drive near the ocean, hose off the undercarriage at least once a month.
- It is important that the drain holes in the lower edges of the doors, rocker panels, and trunk be kept clear and open.

- If you detect any stone chips or scratches in the paint, touch them up immediately. The cost of such repairs is considered the responsibility of the owner.
- If your vehicle is damaged due to a collision or similar cause that destroys the paint and protective coating, have your vehicle repaired as soon as possible. The cost of such repairs is considered the responsibility of the owner.
- If you carry special cargo such as chemicals, fertilizers, de-icer salt, etc., be sure that such materials are well packaged and sealed.
- If a lot of driving is done on gravel roads, consider mud or stone shields behind each wheel.
- Use Mopar Touch Up Paint on scratches as soon as possible. Your authorized dealer has touch up paint to match the color of your vehicle.

INTERIORS

Seats And Fabric Parts

Use Mopar Total Clean to clean fabric upholstery and carpeting.

WARNING!

Do not use volatile solvents for cleaning purposes. Many are potentially flammable, and if used in closed areas they may cause respiratory harm.

Seat Belt Maintenance

Do not bleach, dye or clean the belts with chemical solvents or abrasive cleaners. This will weaken the fabric. Sun damage can also weaken the fabric.

If the belts need cleaning, use a mild soap solution or lukewarm water. Do not remove the belts from the vehicle to wash them. Dry with a soft cloth.

Replace the belts if they appear frayed or worn or if the buckles do not work properly.

WARNING!

A frayed or torn belt could rip apart in a collision and leave you with no protection. Inspect the belt system periodically, checking for cuts, frays, or loose parts. Damaged parts must be replaced immediately. Do not disassemble or modify the system. Seat belt assemblies

(Continued)

WARNING! *(Continued)*

must be replaced after a collision if they have been damaged (i.e., bent retractor, torn webbing, etc.).

Plastic And Coated Parts

Use Mopar Total Clean to clean vinyl upholstery.

CAUTION!

- **Direct contact of air fresheners, insect repellents, suntan lotions, or hand sanitizers to the plastic, painted, or decorated surfaces of the interior may cause permanent damage. Wipe away immediately.**
- **Damage caused by these type of products may not be covered by your New Vehicle Limited Warranty.**

Cleaning Plastic Instrument Cluster Lenses

The lenses in front of the instruments in this vehicle are molded in clear plastic. When cleaning the lenses, care must be taken to avoid scratching the plastic.

1. Clean with a wet soft cloth. A mild soap solution may be used, but do not use high alcohol content or abrasive cleaners. If soap is used, wipe clean with a clean damp cloth.
2. Dry with a soft cloth.

Leather Parts

Mopar Total Clean is specifically recommended for leather upholstery.

Your leather upholstery can be best preserved by regular cleaning with a damp soft cloth. Small particles of dirt can act as an abrasive and damage the leather upholstery and should be removed promptly with a damp cloth. Stubborn soils can be removed easily with a soft cloth and Mopar Total Clean. Care should be taken to avoid soaking your leather upholstery with any liquid. Please do not use polishes, oils, cleaning fluids, solvents, detergents, or ammonia-based cleaners to clean your leather upholstery. Application of a leather conditioner is not required to maintain the original condition.

NOTE: If equipped with light colored leather, it tends to show any foreign material, dirt, and fabric dye transfer more so than darker colors. The leather is designed to for easy cleaning, and FCA recommends Mopar total care leather cleaner applied on a cloth to clean the leather seats as needed.

CAUTION!

Do not use Alcohol and Alcohol-based and/or Ketone based cleaning products to clean leather seats, as damage to the seat may result.

Glass Surfaces

All glass surfaces should be cleaned on a regular basis with Mopar Glass Cleaner, or any commercial household-type glass cleaner. Never use an abrasive type cleaner. Use caution when cleaning the inside rear window equipped with electric defrosters or windows equipped with radio antennas. Do not use scrapers or other sharp instrument that may scratch the elements.

When cleaning the rear view mirror, spray cleaner on the towel or cloth that you are using. Do not spray cleaner directly on the mirror.

TECHNICAL SPECIFICATIONS

CONTENTS

- VEHICLE IDENTIFICATION NUMBER 334
- BRAKE SYSTEM 334
- WHEEL AND TIRE TORQUE SPECIFICATIONS . .335
  - Torque Specifications 335
- FUEL REQUIREMENTS 337
  - 2.0L And 2.4L Engine 337
  - Reformulated Gasoline 337
  - Gasoline/Oxygenate Blends 337
  - E-85 Usage In Non-Flex Fuel Vehicles. 338
  - CNG And LP Fuel System Modifications 338
  - MMT In Gasoline. 338
  - Materials Added To Fuel 339
  - Fuel System Cautions 339
  - Carbon Monoxide Warnings 340
- FLUID CAPACITIES 340
- FLUIDS AND LUBRICANTS 341
  - Engine 341
  - Chassis 343

VEHICLE IDENTIFICATION NUMBER

The Vehicle Identification Number (VIN) is found on the left front corner of the instrument panel, visible through the windshield. This number also is stamped into the right front body, on the right front seat crossmember under the carpet and the vehicle registration and title.

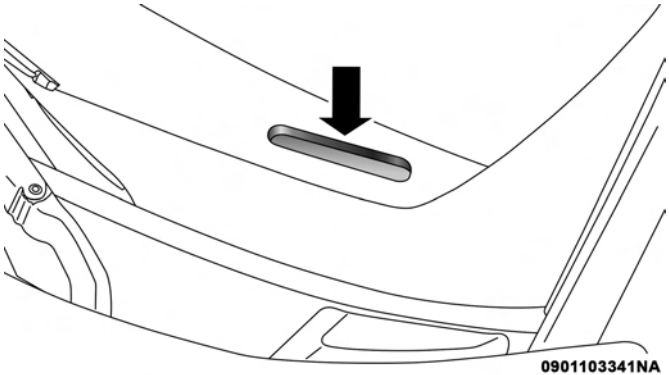

Vehicle Identification Number

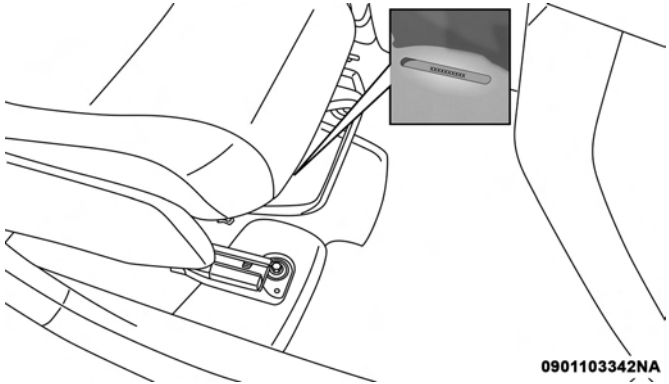

Right Front Body VIN Location

NOTE: It is illegal to remove or alter the VIN.

BRAKE SYSTEM

Your vehicle is equipped with power assisted brakes as standard equipment. In the event power assist is lost for any reason (for example, repeated brake applications with the engine off), the brakes will still function. However, the effort required to brake the vehicle will be much greater than that required with the power system operating.

WARNING!

Riding the brakes can lead to brake failure and possibly a collision. Driving with your foot resting or riding on the brake pedal can result in abnormally high brake temperatures, excessive lining wear, and possible brake damage. You would not have your full braking capacity in an emergency.

If either of the two hydraulic systems lose normal capability, the remaining system will still function with some loss of overall braking effectiveness. This will be evident by increased pedal travel during application and greater pedal force required to slow or stop. In addition, if the malfunction is caused by an internal leak, as the brake fluid in the master cylinder drops, the "Brake Warning Light" will light.

WARNING!

Driving a vehicle with the "Brake Warning Light" on is dangerous. A significant decrease in braking performance or vehicle stability during braking may occur. It will take you longer to stop the vehicle or will make your vehicle harder to control. You could have a collision. Have the vehicle checked immediately.

WHEEL AND TIRE TORQUE SPECIFICATIONS

Proper lug nut/bolt torque is very important to ensure that the wheel is properly mounted to the vehicle. Any time a wheel has been removed and reinstalled on the vehicle, the lug nuts/bolts should be torqued using a properly calibrated torque wrench.

Torque Specifications

Lug Nut/Bolt Torque	**Lug Nut/ Bolt Size	Lug Nut/ Bolt Socket Size
100 Ft-Lbs (135 N·m)	M12 x 1.5	19 mm

**Use only your authorized dealer recommended lug nuts/ bolts and clean or remove any dirt or oil before tightening.

Inspect the wheel mounting surface prior to mounting the tire and remove any corrosion or loose particles.

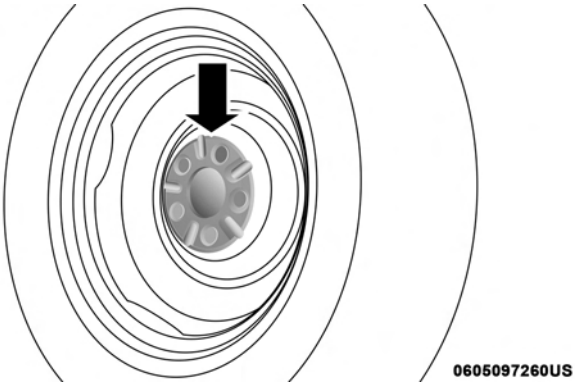

Wheel Mounting Surface

Tighten the lug nuts/bolts in a star pattern until each nut/bolt has been tightened twice.

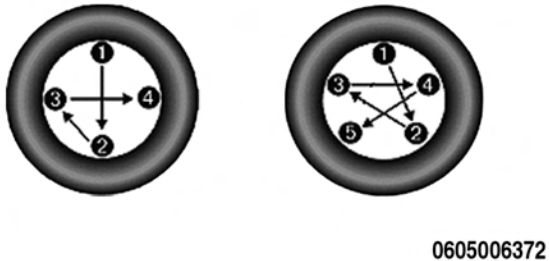

Torque Patterns

After 25 miles (40 km), check the lug nut/bolt torque to be sure that all the lug nuts/bolts are properly seated against the wheel.

WARNING!

To avoid the risk of forcing the vehicle off the jack, do not tighten the lug nuts fully until the vehicle has been lowered. Failure to follow this warning may result in personal injury.

FUEL REQUIREMENTS

2.0L And 2.4L Engine

These engines are designed to meet all emissions regulations and provide optimum fuel economy and performance when using high quality unleaded "Regular" gasoline having a posted octane number of 87 as specified by the (R+M)/2 method. The use of higher octane "Premium" gasoline is not required, as it will not provide any benefit over "Regular" gasoline in these engines.

While operating on gasoline with an octane number of 87, hearing a light knocking sound from the engine is not a cause for concern. However, if the engine is heard making a heavy knocking sound, see your dealer immediately. Use of gasoline with an octane number lower than 87 can cause engine failure and may void or not be covered by the New Vehicle Limited Warranty.

Poor quality gasoline can cause problems such as hard starting, stalling, and hesitations. If you experience these symptoms, try another brand of gasoline before considering service for the vehicle.

Reformulated Gasoline

Many areas of the country require the use of cleaner burning gasoline referred to as "Reformulated Gasoline". Reformulated gasoline contains oxygenates and are specifically blended to reduce vehicle emissions and improve air quality.

The use of reformulated gasoline is recommended. Properly blended reformulated gasoline will provide improved performance and durability of engine and fuel system components.

Gasoline/Oxygenate Blends

Some fuel suppliers blend unleaded gasoline with oxygenates such as ethanol.

CAUTION!

DO NOT use gasoline containing methanol or gasoline containing more than 15% ethanol (E-15). Use of these blends may result in starting and drivability problems, damage critical fuel system components, cause emissions to exceed the applicable standard, and/or cause the "Malfunction Indicator Light" to illuminate. Please observe pump labels as they should clearly communicate if a fuel contains greater than 15% ethanol (E-15).

Problems that result from using gasoline containing more than 15% ethanol (E-15) or gasoline containing methanol are not the responsibility of the manufacturer and may void or not be covered under New Vehicle Limited Warranty.

E-85 Usage In Non-Flex Fuel Vehicles

Non-Flex Fuel Vehicles (FFV) are compatible with gasoline containing up to 15% ethanol (E-15). Gasoline with higher ethanol content may void the New Vehicle Limited Warranty.

If a Non-FFV vehicle is inadvertently fueled with E-85 fuel, the engine will have some or all of these symptoms:

- Operate in a lean mode.
- OBD II “Malfunction Indicator Light” on.
- Poor engine performance.
- Poor cold start and cold drivability.
- Increased risk for fuel system component corrosion.

CNG And LP Fuel System Modifications

Modifications that allow the engine to run on compressed natural gas (CNG) or liquid propane (LP) may result in damage to the engine, emissions, and fuel system components. Problems that result from running CNG or LP are not the responsibility of the manufacturer and may void or not be covered under the New Vehicle Limited Warranty.

MMT In Gasoline

Methylcyclopentadienyl Manganese Tricarbonyl (MMT) is a manganese-containing metallic additive that is blended into some gasoline to increase octane. Gasoline blended with MMT provides no performance advantage beyond gasoline of the same octane number without MMT. Gasoline blended with MMT reduces spark plug life and reduces emissions system performance in some vehicles. The manufacturer recommends that gasoline without MMT be used in your vehicle. The MMT content of gasoline may not be indicated on the gasoline pump; therefore, you should ask your gasoline retailer whether the gasoline contains MMT. MMT is prohibited in Federal and California reformulated gasoline.

Materials Added To Fuel

Besides using unleaded gasoline with the proper octane rating, gasolines that contain detergents, corrosion and stability additives are recommended. Using gasolines that have these additives will help improve fuel economy, reduce emissions, and maintain vehicle performance.

Designated TOP TIER Detergent Gasoline contains a higher level of detergents to further aide in minimizing engine and fuel system deposits. When available, the usage of Top Tier Detergent gasoline is recommended. Visit www.toptiergas.com for a list of TOP TIER Detergent Gasoline Retailers.

Indiscriminate use of fuel system cleaning agents should be avoided. Many of these materials intended for gum and varnish removal may contain active solvents or similar ingredients. These can harm fuel system gasket and diaphragm materials.

Fuel System Cautions

CAUTION!

Follow these guidelines to maintain your vehicle's performance:

- **The use of leaded gasoline is prohibited by Federal law. Using leaded gasoline can impair engine performance and damage the emissions control system.**
- **An out-of-tune engine or certain fuel or ignition malfunctions can cause the catalytic converter to overheat. If you notice a pungent burning odor or some light smoke, your engine may be out of tune or malfunctioning and may require immediate service. Contact your authorized dealer for service assistance.**
- **The use of fuel additives, which are now being sold as octane enhancers, is not recommended. Most of these products contain high concentrations of methanol. Fuel system damage or vehicle performance problems resulting from the use of such fuels or additives is not the responsibility of the manufacturer and may void or not be covered under the New Vehicle Limited Warranty.**

NOTE: Intentional tampering with the emissions control system can result in civil penalties being assessed against you.

Carbon Monoxide Warnings

WARNING!

Carbon monoxide (CO) in exhaust gases is deadly. Follow the precautions below to prevent carbon monoxide poisoning:

- **Do not inhale exhaust gases. They contain carbon monoxide, a colorless and odorless gas, which can kill. Never run the engine in a closed area, such as a**

(Continued)

WARNING! *(Continued)*

garage, and never sit in a parked vehicle with the engine running for an extended period. If the vehicle is stopped in an open area with the engine running for more than a short period, adjust the ventilation system to force fresh, outside air into the vehicle.

- **Guard against carbon monoxide with proper maintenance. Have the exhaust system inspected every time the vehicle is raised. Have any abnormal conditions repaired promptly. Until repaired, drive with all side windows fully open.**

FLUID CAPACITIES

	U.S.	Metric
Fuel (Approximate)	13.6 Gallons	51 Liters
Engine Oil with Filter		
2.0L and 2.4L Engine (SAE 5W-20, API Certified)	4.5 Quarts	4.26 Liters
Cooling System *		
2.0L and 2.4L Engine (Mopar Antifreeze/Engine Coolant 10 Year/150,000 Mile Formula or equivalent)	7.2 Quarts	6.8 Liters
* Includes heater and coolant recovery bottle filled to MAX level.		

FLUIDS AND LUBRICANTS

Engine

Component	Fluid, Lubricant, or Genuine Part
Engine Coolant	We recommend you use Mopar Antifreeze/Coolant 10 Year/150,000 Mile Formula OAT (Organic Additive Technology) or equivalent meeting the requirements of FCA Material Standard MS.90032.
Engine Oil	We recommend you use API Certified SAE 5W-20 Engine Oil, meeting the requirements of FCA Material Standard MS-6395 such as Mopar, Pennzoil, and Shell Helix. Refer to your engine oil filler cap for correct SAE grade.
Engine Oil Filter	We recommend you use Mopar Engine Oil Filter or equivalent.
Spark Plugs	We recommend you use Mopar Spark Plugs.
Fuel Selection	87 Octane, 0-15% Ethanol.

CAUTION!

- **Mixing of engine coolant (antifreeze) other than specified Organic Additive Technology (OAT) engine coolant (antifreeze), may result in engine damage and may decrease corrosion protection. Organic Additive Technology (OAT) engine coolant is different and should not be mixed with Hybrid Organic Additive Technology (HOAT) engine coolant (antifreeze) or any "globally compatible" coolant (antifreeze). If a non-OAT engine coolant (antifreeze) is introduced into the cooling system in an emergency, the cooling system will need to be drained, flushed,**

(Continued)

CAUTION! *(Continued)*

and refilled with fresh OAT coolant (conforming to MS.90032), by an authorized dealer as soon as possible.
- **Do not use water alone or alcohol-based engine coolant (antifreeze) products. Do not use additional rust inhibitors or antirust products, as they may not be compatible with the radiator engine coolant and may plug the radiator.**
- **This vehicle has not been designed for use with propylene glycol-based engine coolant (antifreeze). Use of propylene glycol-based engine coolant (antifreeze) is not recommended.**

Chassis

Component	Fluid, Lubricant, or Genuine Part
Automatic Transmission (CVT) — If Equipped	Use only Mopar CVTF+4 Continuously Variable Transmission Fluid or equivalent. Failure to use the correct fluid may affect the function or performance of your transmission.
Automatic Transmission (Six-Speed) — If Equipped	Use only Mopar SP-IV M Automatic Transmission Fluid or equivalent. Failure to use the correct fluid may affect the function or performance of your transmission.
Manual Transmission — If Equipped	We recommend you use Mopar ATF+4 Automatic Transmission Fluid.
Rear Drive Assembly (RDA)	We recommend you use Mopar Gear & Axle Lubricant SAE 80W-90 API GL 5.
Power Transfer Unit (PTU)	We recommend you use Mopar Gear & Axle Lubricant SAE 80W-90 API GL 5.
Brake Master Cylinder	We recommend you use Mopar DOT 3, SAE J1703 should be used. If DOT 3, SAE J1703 brake fluid is not available, then DOT 4 is acceptable.
Power Steering Reservoir	We recommend you use Mopar Power Steering Fluid +4, Mopar ATF+4 Automatic Transmission Fluid.

MULTIMEDIA

CONTENTS

■ RADIO 130 347

□ Operating Instructions — Radio Mode 353

□ Operation Instructions — CD MODE For CD And MP3 Audio Play. 349

□ Notes On Playing MP3 Files 351

□ Operation Instructions — Auxiliary Mode 353

■ RADIO 130 WITH SATELLITE RADIO 353

□ Operating Instructions — Radio Mode 353

□ Operation Instructions — CD MODE For CD And MP3 Audio Play. 358

□ Notes On Playing MP3 Files 359

□ LIST Button — CD Mode For MP3 Play 361

□ INFO Button — CD Mode For MP3 Play 361

□ Uconnect (Satellite Radio) — If Equipped 362

□ Operating Instructions — Uconnect (Satellite) Mode 363

□ Operating Instructions (Uconnect Phone) — If Equipped 365

■ RADIO 430/430N CD/DVD/HDD/NAV — IF EQUIPPED 365

□ Operating Instructions (Voice Command System) — If Equipped 365

□ Operating Instructions (Uconnect Phone) — If Equipped 365

■ CYBERSECURITY 365

■ STEERING WHEEL AUDIO CONTROLS 367

□ Radio Operation. 367

□ CD Player 368

■ AUX/USB/MP3 CONTROL — IF EQUIPPED . . .368

□ Connecting The iPod Or External USB Device. . .368

- Using This Feature 369
- Controlling The iPod Or External USB Device Using Radio Buttons 369
- Play Mode. 369
- List Or Browse Mode 371
- Bluetooth Streaming Audio (BTSA) 372

■ UCONNECT PHONE — IF EQUIPPED 373

- Operation 375
- Help Command 375
- Cancel Command. 376
- Pair (Link) Uconnect Phone To A Mobile Phone .376
- Dial By Saying A Number. 377
- Call By Saying A Name 377
- Phonebook Download – Automatic Phonebook Transfer From Mobile Phone 377
- Add Names To Your Uconnect Phonebook 378
- Edit Uconnect Phonebook Entries 379
- Delete Uconnect Phonebook Entry 379
- List All Names In The Uconnect Phonebook 380
- Phone Call Features 380
- Uconnect Phone Features 382
- Advanced Phone Connectivity 386
- Things You Should Know About Your Uconnect Phone 387
- General Information 396

■ VOICE COMMAND — IF EQUIPPED 396

- Voice Command System Operation 396
- Commands 397
- Voice Training 400

■ RADIO OPERATION AND MOBILE PHONES . . .401

- Regulatory And Safety Information 401

■ CD/DVD DISC MAINTENANCE 402

RADIO 130

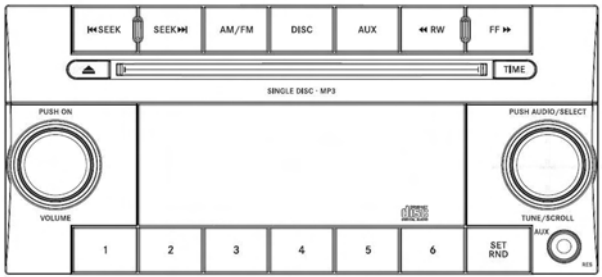

042305232

Radio 130

Operating Instructions — Radio Mode

NOTE: The ignition switch must be in the ON/RUN or ACC position to operate the radio.

Power Switch/Volume Control (Rotary)

Push the ON/VOLUME control knob to turn on the radio. Push the ON/VOLUME control knob a second time to turn off the radio.

Electronic Volume Control

The electronic volume control turns continuously (360 degrees) in either direction, without stopping. Turning the ON/VOLUME control knob to the right increases the volume, and to the left decreases it.

When the audio system is turned on, the sound will be set at the same volume level as last played.

SEEK Buttons

Push and release the SEEK buttons to search for the next listenable station in AM/FM mode. Push the right switch to seek up and the left switch to seek down. The radio will remain tuned to the new station until you make another selection. Holding either button will bypass stations without stopping, until you release it.

Clock Setting Procedure

1. Push and hold the TIME button until the hours blink.
2. Adjust the hours by turning the right side TUNE/SCROLL control knob.
3. After adjusting the hours, push the right side TUNE/SCROLL control knob to set the minutes. The minutes will begin to blink.

4. Adjust the minutes using the right side TUNE/SCROLL control knob. Push the TUNE/SCROLL control knob to save time change.
5. To exit, push any button/knob, or wait five seconds.

RW/FF

Pushing the RW (Rewind) or FF (Fast Forward) buttons causes the tuner to search for the next frequency in the direction of the arrows. This feature operates in either AM or FM frequencies.

TUNE Control

Turn the rotary TUNE/SCROLL control knob clockwise to increase or counterclockwise to decrease the frequency.

Setting The Tone, Balance And Fade

Push the rotary TUNE/SCROLL control knob and BASS will display. Turn the TUNE/SCROLL control knob to the right or left to increase or decrease the bass tones.

Push the rotary TUNE/SCROLL control knob a second time and MID will display. Turn the TUNE/SCROLL control knob to the right or left to increase or decrease the mid-range tones.

Push the rotary TUNE/SCROLL control knob a third time and TREBLE will display. Turn the TUNE/SCROLL control knob to the right or left to increase or decrease the treble tones.

Push the rotary TUNE/SCROLL control knob a fourth time and BALANCE will display. Turn the TUNE/SCROLL control knob to the right or left to adjust the sound level from the right or left side speakers.

Push the rotary TUNE/SCROLL control knob a fifth time and FADE will display. Turn the TUNE/SCROLL control knob to the left or right to adjust the sound level between the front and rear speakers.

Push the rotary TUNE/SCROLL control knob again to exit setting tone, balance, and fade.

AM/FM Button

Push the buttons to select either AM or FM mode.

SET/RND Button — To Set The Pushbutton Memory

When you are receiving a station that you wish to commit to pushbutton memory, push the SET/RND button. The symbol SET 1 will now show in the display window. Select the button (1 to 6) you wish to lock onto this station and push and release that button. If a button is not selected

within five seconds after pushing the SET/RND button, the station will continue to play but will not be stored into pushbutton memory.

You may add a second station to each pushbutton by repeating the above procedure with this exception: Push the SET/RND button twice and SET 2 will show in the display window. Each button can be set for SET 1 and SET 2 in both AM and FM. This allows a total of 12 AM and 12 FM stations to be stored into pushbutton memory. The stations stored in SET 2 memory can be selected by pushing the pushbutton twice.

Every time a preset button is used, a corresponding button number will display.

Buttons 1 - 6

These buttons tune the radio to the stations that you commit to pushbutton memory (12 AM and 12 FM stations).

Operation Instructions — CD MODE For CD And MP3 Audio Play

NOTE:

- The ignition switch must be in the ON/RUN or ACC position to operate the radio.
- This radio is capable of playing compact discs (CD), recordable compact discs (CD-R), rewritable compact discs (CD-RW), compact discs with MP3 tracks and multisession compact discs with CD and MP3 tracks.

Inserting Compact Disc(s)

Gently insert one CD into the CD player with the CD label facing up. The CD will automatically be pulled into the CD player and the CD icon will illuminate on the radio display. If a CD does not go into the slot more than 1.0 inch (2.5 cm), a disc may already be loaded and must be ejected before a new disc can be loaded.

If you insert a disc with the ignition ON/RUN and the radio ON, the unit will switch from radio to CD mode and begin to play when you insert the disc. The display will show the track number, and index time in minutes and seconds. Play will begin at the start of track 1.

CAUTION!

- **This CD player will accept 4–3/4 inch (12 cm) discs only. The use of other sized discs may damage the CD player mechanism.**
- **Do not use adhesive labels. These labels can peel away and jam the player mechanism.**
- **The Radio 130 is a single CD player. Do not attempt to insert a second CD if one is already loaded.**
- **Dual-media disc types (one side is a DVD, the other side is a CD) should not be used, and they can cause damage to the player.**

EJECT Button — Ejecting A CD

Push the EJECT button to eject the CD.

If you have ejected a disc and have not removed it within 10 seconds, it will be reloaded. If the CD is not removed, the radio will reinsert the CD but will not play it.

A disc can be ejected with the radio and ignition OFF.

NOTE: Ejecting with the ignition OFF is not allowed on convertible or soft-top models (if equipped.)

SEEK Button

Push the right SEEK button for the next selection on the CD. Push the left SEEK button to return to the beginning of the current selection, or return to the beginning of the previous selection if the CD is within the first second of the current selection. Pushing and holding the SEEK button will allow faster scrolling through the tracks in CD and MP3 modes.

TIME Button

Push this button to change the display from a large CD playing time display to a small CD playing time display.

RW/FF

Push and hold the FF (Fast Forward) button and the CD player will begin to fast forward until FF is released, or RW or another CD button is pushed. The RW (Reverse) button operates in a similar manner.

AM/FM Button

Push the button to select either AM or FM mode.

SET/RND Button (Random Play Button)

Push this button while the CD is playing to activate Random Play. This feature plays the selections on the compact disc in random order to provide an interesting change of pace.

Push the right SEEK button to move to the next randomly selected track.

Push the RND button a second time to stop Random Play.

Notes On Playing MP3 Files

The radio can play MP3 files; however, acceptable MP3 file recording media and formats are limited. When writing MP3 files, pay attention to the following restrictions.

Supported Media (Disc Types)

The MP3 file recording media supported by the radio are CDDA, CD-R, CD-RW, MP3, and CDDA+MP3.

Supported Medium Formats (File Systems)

The medium formats supported by the radio are ISO 9660 Level 1 and Level 2 and includes the Joliet extension. When reading discs recorded using formats other than ISO 9660 Level 1 and Level 2, the radio may fail to read files properly and may be unable to play the file normally. UDF and Apple HFS formats are not supported.

The radio uses the following limits for file systems:

- Maximum number of folder levels: 8
- Maximum number of files: 255
- Maximum number of folders. (The radio display of file names and folder names is limited. For large numbers of files and/or folders, the radio may be unable to display the file name and folder name, and will assign a number instead. With a maximum number of files, exceeding 20 folders will result in this display. With 200 files, exceeding 50 folders will result in this display.)

Maximum number of characters in file/folder names:

- Level 1: 12 (including a separator "." and a three-character extension)
- Level 2: 31 (including a separator "." and a three-character extension)

Multi-session disc formats are supported by the radio. Multi-session discs may contain combinations of normal CD audio tracks and computer files (including MP3 files). Discs created with an option such as "keep disc open after

writing" are most likely multi-session discs. The use of multi-session for CD audio or MP3 playback may result in longer disc loading times.

Supported MP3 File Formats

The radio will recognize only files with the *.MP3 extension as MP3 files. Non-MP3 files named with the *.MP3 extension may cause playback problems. The radio is designed to recognize the file as an invalid MP3 and will not play the file.

When using the MP3 encoder to compress audio data to an MP3 file, the bit rate and sampling frequencies in the following table are supported. In addition, variable bit rates (VBR) are also supported. The majority of MP3 files use a 44.1 kHz sampling rate and a 192, 160, 128, 96 or VBR bit rate.

MPEG Specification	Sampling Frequency (kHz)	Bit Rate (kbps)
MPEG-1 Audio Layer 3	48, 44.1, 32	320, 256, 224, 192, 160, 128, 112, 96, 80, 64, 56, 48, 40, 32
MPEG-2 Audio Layer 3	24, 22.05, 16	160, 128, 144, 112, 96, 80, 64, 56, 48, 40, 32, 24, 16, 8

ID3 Tag information for artist, song title, and album title are supported for version 1 ID3 tags. ID3 version 2 is not supported by the radios.

Playlist files are not supported. MP3 Pro files are not supported.

Playback Of MP3 Files

When a medium containing MP3 data is loaded, the radio checks all files on the medium. If the medium contains a lot of folders or files, the radio will take more time to start playing the MP3 files.

Loading times for playback of MP3 files may be affected by the following:

- Media - CD-RW media may take longer to load than CD-R media
- Medium formats - Multisession discs may take longer to load than non-multisession discs

- Number of files and folders - Loading times will increase with more files and folders

To increase the speed of disc loading, it is recommended to use CD-R media and single-session discs. To create a single-session disc, enable the "Disc at Once" option before writing to the disc.

Operation Instructions — Auxiliary Mode

The auxiliary (AUX) jack is an audio input jack, which allows the user to plug in a portable device, such as an MP3 player, or iPod, and utilize the vehicle's audio system to amplify the source and play through the vehicle speakers.

Pushing the DISC/AUX button will change the mode to auxiliary device if the AUX jack is connected.

NOTE: The AUX device must be turned on and the device's volume set to proper level. If the AUX audio is not loud enough, turn the device's volume up. If the AUX audio sounds distorted, turn the device's volume down.

TIME Button (Auxiliary Mode)

Push this button to change the display to time of day. The time of day will display for five seconds (when ignition is OFF).

RADIO 130 WITH SATELLITE RADIO

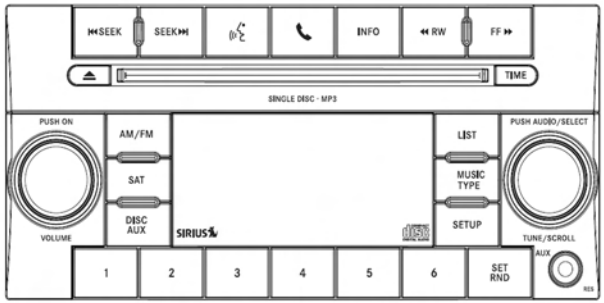

042340030

Radio 130

Operating Instructions — Radio Mode

NOTE: The ignition switch must be in the ON/RUN or ACC position to operate the radio.

Power Switch/Volume Control (Rotary)

Push the ON/VOLUME control knob to turn on the radio. Push the ON/VOLUME control knob a second time to turn off the radio.

Electronic Volume Control

The electronic volume control turns continuously (360 degrees) in either direction, without stopping. Turning the ON/VOLUME control knob to the right increases the volume, and to the left decreases it.

When the audio system is turned on, the sound will be set at the same volume level as last played.

SEEK Buttons

Push and release the SEEK buttons to search for the next listenable station in AM/FM mode. Push the right switch to seek up and the left switch to seek down. The radio will remain tuned to the new station until you make another selection. Holding either button will bypass stations without stopping, until you release it.

Voice Command System (Radio) — If Equipped

Refer to “Voice Command” in “Multimedia”.

Voice Command Button Uconnect Phone — If Equipped

Push this button to operate the Uconnect Phone feature (if equipped). Refer to “Uconnect Phone” in “Multimedia”.

If your vehicle is not equipped with or this feature is not available on your vehicle, a “Not Equipped With Uconnect Phone” message will display on the radio screen.

Phone Button Uconnect Phone — If Equipped

Push this button to operate the Uconnect Phone feature (if equipped). Refer to “Uconnect Phone” in “Multimedia”.

If your vehicle is not equipped with, or this feature is not available on your vehicle, a “Not Equipped With Uconnect Phone” message will display on the radio screen.

TIME Button

Push the TIME button to alternate display of the time and radio frequency.

Clock Setting Procedure

1. Push and hold the TIME button until the hours blink.
2. Adjust the hours by turning the right side TUNE/SCROLL control knob.
3. After adjusting the hours, push the right side TUNE/SCROLL control knob to set the minutes. The minutes will begin to blink.

4. Adjust the minutes using the right side TUNE/SCROLL control knob. Push the TUNE/SCROLL control knob to save time change.
5. To exit, push any button/knob, or wait five seconds.

INFO Button

Push the INFO button for an RDS station (one with call letters displayed). The radio will return a Radio Text message broadcast from an FM station (FM mode only).

RW/FF

Pushing the RW (Rewind) or FF (Fast Forward) buttons causes the tuner to search for the next frequency in the direction of the arrows. This feature operates in either AM or FM frequencies.

TUNE Control

Turn the rotary TUNE/SCROLL control knob clockwise to increase or counterclockwise to decrease the frequency.

Setting The Tone, Balance And Fade

Push the rotary TUNE/SCROLL control knob and BASS will display. Turn the TUNE/SCROLL control knob to the right or left to increase or decrease the bass tones.

Push the rotary TUNE/SCROLL control knob a second time and MID will display. Turn the TUNE/SCROLL control knob to the right or left to increase or decrease the mid-range tones.

Push the rotary TUNE/SCROLL control knob a third time and TREBLE will display. Turn the TUNE/SCROLL control knob to the right or left to increase or decrease the treble tones.

Push the rotary TUNE/SCROLL control knob a fourth time and BALANCE will display. Turn the TUNE/SCROLL control knob to the right or left to adjust the sound level from the right or left side speakers.

Push the rotary TUNE/SCROLL control knob a fifth time and FADE will display. Turn the TUNE/SCROLL control knob to the left or right to adjust the sound level between the front and rear speakers.

Push the rotary TUNE/SCROLL control knob again to exit setting tone, balance, and fade.

MUSIC TYPE Button

Pushing this button once will turn on the Music Type mode for five seconds. Pushing the MUSIC TYPE button or turning the TUNE/SCROLL control knob within five seconds will allow the program format type to be selected. Many radio stations do not currently broadcast Music Type information.

Toggle the MUSIC TYPE button to select the following format types:

Program Type	16-Digit Character Display
No program type or undefined	None
Adult Hits	Adlt Hit
Classical	Classicl
Classic Rock	Cls Rock
College	College
Country	Country
Foreign Language	Language
Information	Inform
Jazz	Jazz
News	News
Nostalgia	Nostalga
Oldies	Oldies
Personality	Persnlty
Public	Public
Rhythm and Blues	R & B
Religious Music	Rel Musc
Religious Talk	Rel Talk
Rock	Rock
Soft	Soft
Soft Rock	Soft Rck
Soft Rhythm and Blues	Soft R&B
Sports	Sports
Talk	Talk
Top 40	Top 40
Weather	Weather

By pushing the SEEK button when the Music Type icon is displayed, the radio will be tuned to the next frequency station with the same selected Music Type name. The Music Type function only operates when in the FM mode.

If a preset button is activated while in the Music Type (Program Type) mode, the Music Type mode will be exited and the radio will tune to the preset station.

SETUP Button

Pushing the SETUP button allows you to select between the following items:

- **Set Clock** — Pushing the SELECT button will allow you to set the clock. Adjust the hours by turning the TUNE/SCROLL control knob. After adjusting the hours, push the TUNE/SCROLL control knob to set the minutes. The minutes will begin to blink. Adjust the minutes using the right side TUNE/SCROLL control knob. Push the TUNE/SCROLL control knob to save time change.

AM/FM Button

Push the buttons to select either AM or FM mode.

SET/RND Button — To Set The Pushbutton Memory

When you are receiving a station that you wish to commit to pushbutton memory, push the SET/RND button. The symbol SET 1 will now show in the display window. Select the button (1 to 6) you wish to lock onto this station and push and release that button. If a button is not selected within five seconds after pushing the SET/RND button, the station will continue to play but will not be stored into pushbutton memory.

You may add a second station to each pushbutton by repeating the above procedure with this exception: Push the SET/RND button twice and SET 2 will show in the display window. Each button can be set for SET 1 and SET 2 in both AM and FM. This allows a total of 12 AM and 12 FM stations to be stored into pushbutton memory. The stations stored in SET 2 memory can be selected by pushing the pushbutton twice.

Every time a preset button is used, a corresponding button number will display.

Buttons 1 - 6

These buttons tune the radio to the stations that you commit to pushbutton memory (12 AM and 12 FM stations).

DISC/AUX Button

Pushing the DISC/AUX button will allow you to switch from AM/FM modes to DISC/AUX mode.

Operation Instructions — CD MODE For CD And MP3 Audio Play

NOTE:

- The ignition switch must be in the ON/RUN or ACC position to operate the radio.
- This radio is capable of playing compact discs (CD), recordable compact discs (CD-R), rewritable compact discs (CD-RW), compact discs with MP3 tracks and multisession compact discs with CD and MP3 tracks.

Inserting Compact Disc(s)

Gently insert one CD into the CD player with the CD label facing up. The CD will automatically be pulled into the CD player and the CD icon will illuminate on the radio display. If a CD does not go into the slot more than 1.0 inch (2.5 cm), a disc may already be loaded and must be ejected before a new disc can be loaded.

If you insert a disc with the ignition ON/RUN and the radio ON, the unit will switch from radio to CD mode and begin to play when you insert the disc. The display will show the track number, and index time in minutes and seconds. Play will begin at the start of track 1.

CAUTION!

- **This CD player will accept 4–3/4 inch (12 cm) discs only. The use of other sized discs may damage the CD player mechanism.**
- **Do not use adhesive labels. These labels can peel away and jam the player mechanism.**
- **The Radio 130 is a single CD player. Do not attempt to insert a second CD if one is already loaded.**
- **Dual-media disc types (one side is a DVD, the other side is a CD) should not be used, and they can cause damage to the player.**

EJECT Button — Ejecting A CD

Push the EJECT button to eject the CD.

If you have ejected a disc and have not removed it within 10 seconds, it will be reloaded. If the CD is not removed, the radio will reinsert the CD but will not play it.

A disc can be ejected with the radio and ignition OFF.

NOTE: Ejecting with the ignition OFF is not allowed on convertible or soft-top models (if equipped.)

SEEK Button

Push the right SEEK button for the next selection on the CD. Push the left SEEK button to return to the beginning of the current selection, or return to the beginning of the previous selection if the CD is within the first second of the current selection. Pushing and holding the SEEK button will allow faster scrolling through the tracks in CD and MP3 modes.

TIME Button

Push this button to change the display from a large CD playing time display to a small CD playing time display.

RW/FF

Push and hold the FF (Fast Forward) button and the CD player will begin to fast forward until FF is released, or RW or another CD button is pushed. The RW (Reverse) button operates in a similar manner.

AM/FM Button

Push the button to select either AM or FM mode.

SET/RND Button (Random Play Button)

Push this button while the CD is playing to activate Random Play. This feature plays the selections on the compact disc in random order to provide an interesting change of pace.

Push the right SEEK button to move to the next randomly selected track.

Push the RND button a second time to stop Random Play.

Notes On Playing MP3 Files

The radio can play MP3 files; however, acceptable MP3 file recording media and formats are limited. When writing MP3 files, pay attention to the following restrictions.

Supported Media (Disc Types)

The MP3 file recording media supported by the radio are CDDA, CD-R, CD-RW, MP3, and CDDA+MP3.

Supported Medium Formats (File Systems)

The medium formats supported by the radio are ISO 9660 Level 1 and Level 2 and includes the Joliet extension. When reading discs recorded using formats other than ISO 9660

Level 1 and Level 2, the radio may fail to read files properly and may be unable to play the file normally. UDF and Apple HFS formats are not supported.

The radio uses the following limits for file systems:

- Maximum number of folder levels: 8
- Maximum number of files: 255
- Maximum number of folders. (The radio display of file names and folder names is limited. For large numbers of files and/or folders, the radio may be unable to display the file name and folder name, and will assign a number instead. With a maximum number of files, exceeding 20 folders will result in this display. With 200 files, exceeding 50 folders will result in this display.)

Maximum number of characters in file/folder names:

- Level 1: 12 (including a separator "." and a three-character extension)
- Level 2: 31 (including a separator "." and a three-character extension)

Multi-session disc formats are supported by the radio. Multi-session discs may contain combinations of normal CD audio tracks and computer files (including MP3 files). Discs created with an option such as "keep disc open after writing" are most likely multi-session discs. The use of multi-session for CD audio or MP3 playback may result in longer disc loading times.

Supported MP3 File Formats

The radio will recognize only files with the *.MP3 extension as MP3 files. Non-MP3 files named with the *.MP3 extension may cause playback problems. The radio is designed to recognize the file as an invalid MP3 and will not play the file.

When using the MP3 encoder to compress audio data to an MP3 file, the bit rate and sampling frequencies in the following table are supported. In addition, variable bit rates (VBR) are also supported. The majority of MP3 files use a 44.1 kHz sampling rate and a 192, 160, 128, 96 or VBR bit rate.

MPEG Specification	Sampling Frequency (kHz)	Bit Rate (kbps)
MPEG-1 Audio Layer 3	48, 44.1, 32	320, 256, 224, 192, 160, 128, 112, 96, 80, 64, 56, 48, 40, 32

MPEG Specification	Sampling Frequency (kHz)	Bit Rate (kbps)
MPEG-2 Audio Layer 3	24, 22.05, 16	160, 128, 144, 112, 96, 80, 64, 56, 48, 40, 32, 24, 16, 8

ID3 Tag information for artist, song title, and album title are supported for version 1 ID3 tags. ID3 version 2 is not supported by the radios.

Playlist files are not supported. MP3 Pro files are not supported.

Playback Of MP3 Files

When a medium containing MP3 data is loaded, the radio checks all files on the medium. If the medium contains a lot of folders or files, the radio will take more time to start playing the MP3 files.

Loading times for playback of MP3 files may be affected by the following:

- Media - CD-RW media may take longer to load than CD-R media
- Medium formats - Multisession discs may take longer to load than non-multisession discs
- Number of files and folders - Loading times will increase with more files and folders

To increase the speed of disc loading, it is recommended to use CD-R media and single-session discs. To create a single-session disc, enable the “Disc at Once” option before writing to the disc.

LIST Button — CD Mode For MP3 Play

Pushing the LIST button will bring up a list of all folders on the disc. Scrolling up or down the list is done by turning the TUNE/SCROLL control knob. Selecting a folder by pushing the TUNE/SCROLL control knob will begin playing the files contained in that folder (or the next folder in sequence if the selection does not contain playable files).

The folder list will time out after five seconds.

INFO Button — CD Mode For MP3 Play

Pushing the INFO button repeatedly will scroll through the following TAG information: Song Title, Artist, File Name, and Folder Name (if available).

Push the INFO button once more to return to ″elapsed time″ priority mode.

Push and hold the INFO button for three seconds or more and the radio will display song titles for each file.

Push and hold the INFO button again for three seconds to return to "elapsed time" display.

Operation Instructions — Auxiliary Mode

The auxiliary (AUX) jack is an audio input jack which allows the user to plug in a portable device such as an MP3 player and utilize the vehicle's audio system to amplify the source and play through the vehicle speakers.

Pushing the AUX button will change the mode to auxiliary device if the AUX jack is connected.

NOTE: The AUX device must be turned on and the device's volume set to the proper level. If the AUX audio is not loud enough, turn the device's volume up. If the AUX audio sounds distorted, turn the device's volume down.

TIME Button (Auxiliary Mode)

Push this button to change the display to time of day. The time of day will display for five seconds (when the ignition is OFF).

Uconnect (Satellite Radio) — If Equipped

Satellite radio uses direct satellite-to-receiver broadcasting technology to provide clear digital sound, coast to coast. The subscription service provider is Sirius Satellite Radio. This service offers over 130 channels of music, sports, news, entertainment, and programming for children, directly from its satellites and broadcasting studios.

NOTE: Sirius service is not available in Hawaii and has limited coverage in Alaska.

System Activation

Sirius Satellite Radio service is pre-activated, and you may begin listening immediately to the one year of audio service that is included with the factory-installed satellite radio system in your vehicle. Sirius will supply a welcome kit that contains general information, including how to setup your online listening account. For further information, call the toll-free number 888-539-7474, or visit the Sirius web site at www.siriusxm.com, or at www.siriusxm.ca for Canadian residents.

Electronic Serial Number/Sirius Identification Number (ESN/SID)

Please have the following information available when calling:

1. The Electronic Serial Number/Sirius Identification Number (ESN/SID).
2. Your Vehicle Identification Number.

To access the ESN/SID, refer to the following steps:

ESN/SID Access

With the ignition switch in the ON/RUN or ACC position and the radio on, push the SETUP button and scroll using the TUNE/SCROLL control knob until Sirius ID is selected. Push the TUNE/SCROLL control knob and the Sirius ID number will display. The Sirius ID number display will time out in two minutes. Push any button on the radio to exit this screen.

Selecting Uconnect (Satellite) Mode

Push the SAT button until "SAT" appears in the display. A CD may remain in the radio while in the Satellite radio mode.

Satellite Antenna

To ensure optimum reception, do not place items on the roof around the rooftop antenna location. Metal objects placed within the line of sight of the antenna will cause decreased performance. Larger luggage items such as bikes should be placed as far rearward as possible, within the loading design of the rack. Do not place items directly on or above the antenna.

Reception Quality

Satellite reception may be interrupted due to one of the following reasons:

- The vehicle is parked in an underground parking structure or under a physical obstacle.
- Dense tree coverage may interrupt reception in the form of short audio mutes.
- Driving under wide bridges or along tall buildings can cause intermittent reception.
- Placing objects over or too close to the antenna can cause signal blockage.

Operating Instructions — Uconnect (Satellite) Mode

NOTE: The ignition switch must be in the ON/RUN or ACC position to operate the radio.

SEEK Buttons

Push and release the SEEK buttons to search for the next listenable station in AM/FM mode. Push the right switch to seek up and the left switch to seek down. The radio will remain tuned to the new station until you make another selection. Holding either button will bypass stations without stopping, until you release it.

SCAN Button

Pushing the SCAN button causes the tuner to search for the next channel, pausing for eight seconds before continuing to the next. To stop the search, push the SCAN button a second time.

INFO Button

Pushing the INFO button will cycle the display information between Artist, Song Title, and Composer (if available). Also, pushing and holding the INFO button for an additional three seconds will make the radio display the Song Title all of the time (push and hold again to return to normal display).

RW/FF

Pushing the RW (Rewind) or FF (Fast Forward) buttons causes the tuner to search for the next channel in the direction of the arrows.

TUNE Control

Turn the rotary TUNE/SCROLL control knob clockwise to increase or counterclockwise to decrease the frequency.

MUSIC TYPE Button

Pushing this button once will turn on the Music Type mode for five seconds. Pushing the MUSIC TYPE button or turning the TUNE/SCROLL control knob within five seconds will allow the program format type to be selected.

Toggle the MUSIC TYPE button again to select the music type.

By pushing the SEEK button when the Music Type function is active, the radio will be tuned to the next channel with the same selected Music Type name.

If a preset button is activated while in the Music Type (Program Type) mode, the Music Type mode will be exited and the radio will tune to the preset channel.

SETUP Button

Pushing the SETUP button allows you to select the following items:

- Display Sirius ID number — Push the AUDIO/SELECT button to display the Sirius ID number. This number is used to activate, deactivate, or change the Sirius subscription.

SET Button — To Set The Pushbutton Memory

When you are receiving a channel that you wish to commit to push button memory, push the SET button. The symbol SET 1 will now show in the display window. Select the button (1-6) you wish to lock onto this channel and push and release that button. If a button is not selected within five seconds after pushing the SET button, the channel will continue to play but will not be stored into push button memory.

You may add a second channel to each push button by repeating the above procedure with this exception: Push the SET button twice and SET 2 will show in the display window. Each button can be set for SET 1 and SET 2. This allows a total of 12 Satellite channels to be stored into push button memory. The channels stored in SET 2 memory can be selected by pushing the push button twice.

Every time a preset button is used, a corresponding button number will display.

Buttons 1 - 6

These buttons tune the radio to the channels that you commit to pushbutton memory (12 Satellite stations).

Operating Instructions (Uconnect Phone) — If Equipped

Refer to “Uconnect Phone” in “Multimedia”.

RADIO 430/430N CD/DVD/HDD/NAV — IF EQUIPPED

Refer to your Uconnect Owner’s Manual Supplement for detailed operating instructions.

Operating Instructions (Voice Command System) — If Equipped

Refer to “Voice Command” in “Multimedia” for further details.

Operating Instructions (Uconnect Phone) — If Equipped

Refer to “Uconnect Phone” in “Multimedia” for further details.

CYBERSECURITY

Your vehicle may be a connected vehicle and may be equipped with both wired and wireless networks. These networks allow your vehicle to send and receive information. This information allows systems and features in your vehicle to function properly.

Your vehicle may be equipped with certain security features to reduce the risk of unauthorized and unlawful access to vehicle systems and wireless communications. Vehicle software technology continues to evolve over time and FCA US LLC, working with its suppliers, evaluates and takes appropriate steps as needed. Similar to a computer or other devices, your vehicle may require software updates to improve the usability and performance of your systems or to reduce the potential risk of unauthorized and unlawful access to your vehicle systems.

The risk of unauthorized and unlawful access to your vehicle systems may still exist, even if the most recent version of vehicle software (such as Uconnect software) is installed.

WARNING!

- **It is not possible to know or to predict all of the possible outcomes if your vehicle's systems are breached. It may be possible that vehicle systems, including safety related systems, could be impaired or a loss of vehicle control could occur that may result in an accident involving serious injury or death.**

(Continued)

WARNING! *(Continued)*

- **ONLY insert media (e.g., USB, SD card, or CD) into your vehicle if it came from a trusted source. Media of unknown origin could possibly contain malicious software, and if installed in your vehicle, it may increase the possibility for vehicle systems to be breached.**
- **As always, if you experience unusual vehicle behavior, take your vehicle to your nearest authorized dealer immediately.**

NOTE:

- FCA or your dealer may contact you directly regarding software updates.
- To help further improve vehicle security and minimize the potential risk of a security breach, vehicle owners should:
  - Routinely check www.driveuconnect.com/software-update to learn about available Uconnect software updates.
  - Only connect and use trusted media devices (e.g. personal mobile phones, USBs, CDs).

Privacy of any wireless and wired communications cannot be assured. Third parties may unlawfully intercept information and private communications without your consent. For further information, refer to “Onboard Diagnostic System (OBD II) Cybersecurity” in “Getting To Know Your Instrument Panel”.

STEERING WHEEL AUDIO CONTROLS

The remote sound system controls are located on the rear surface of the steering wheel. Reach behind the wheel to access the switches.

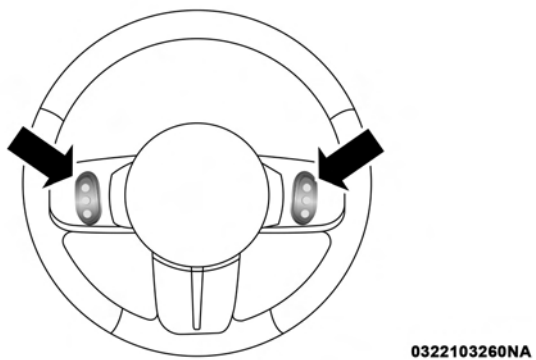

Remote Sound System Controls (Back View Of Steering Wheel)

The right-hand control is a rocker-type switch with a pushbutton in the center and controls the volume and mode of the sound system. Pushing the top of the rocker switch will increase the volume, and pushing the bottom of the rocker switch will decrease the volume.

Pushing the center button will make the radio switch between the various modes available (AM/FM/SAT/CD/HDD/AUX/VES, etc.).

The left-hand control is a rocker-type switch with a pushbutton in the center. The function of the left-hand control is different depending on which mode you are in.

The following describes the left-hand control operation in each mode.

Radio Operation

Pushing the top of the switch will “Seek” up for the next listenable station and pushing the bottom of the switch will “Seek” down for the next listenable station.

The button located in the center of the left-hand control will tune to the next preset station that you have programmed in the radio preset button.

CD Player

Pushing the top of the switch once will go to the next track on the CD. Pushing the bottom of the switch once will go to the beginning of the current track, or to the beginning of the previous track if it is within eight seconds after the current track begins to play.

If you push the switch up or down twice, it plays the second track; three times, it will play the third, etc.

The center button on the left side rocker switch has no function for a single-disc CD player. However, when a multiple-disc CD player is equipped on the vehicle, the center button will select the next available CD in the player.

AUX/USB/MP3 CONTROL — IF EQUIPPED

This feature allows an iPod or external USB device to be plugged into the USB port, located in the center console or glove compartment.

iPod control supports Mini, 4G, Photo, Nano, 5G iPod and iPhone devices. Some iPod software versions may not fully support the iPod control features. Please visit Apple's website for software updates.

NOTE: Connecting an iPod or consumer electronic audio device to the AUX port located in the radio faceplate, plays media, but does not use the iPod/MP3 control feature to control the connected device.

WARNING!

Do not plug in or remove the iPod or external device while driving. Failure to follow this warning could result in a collision.

Connecting The iPod Or External USB Device

Use the connection cable to connect an iPod or external USB device to the vehicle's USB/AUX connector port which is located in the center console or glove compartment.

0322103259NA

AUX/USB Connector Ports

Once the audio device is connected and synchronized to the vehicle's AUX/USB/MP3 control system (iPod or external USB device may take a few minutes to connect), the audio device starts charging and is ready for use by pushing radio switches, as described below.

NOTE: If the audio device battery is completely discharged, it may not communicate with the AUX/USB/MP3 control system until a minimum charge is attained. Leaving the audio device connected to the AUX/USB/MP3 control system may charge it to the required level.

Using This Feature

By using an external USB device to connect to the USB port:

- The audio device can be played on the vehicle's sound system, providing metadata (artist, track title, album, etc.) information on the radio display.
- The audio device can be controlled using the radio buttons to Play, Browse, and List the iPod contents.
- The audio device battery charges when plugged into the USB connector (if supported by the specific audio device).

Controlling The iPod Or External USB Device Using Radio Buttons

To enter the AUX/USB/MP3 control mode and access a connected audio device, either push the "AUX" button on the radio faceplate or push the VR button and say "USB" or "Switch to USB." Once in the AUX/USB/MP3 control mode, audio tracks (if available from audio device) start playing over the vehicle's audio system.

Play Mode

When switched to AUX/USB/MP3 control mode, the iPod or external USB device automatically starts Play mode. In

Play mode, the following buttons on the radio faceplate may be used to control the iPod or external USB device and display data:

- Use the **TUNE** control knob to select the next or previous track.
- Turning it clockwise (forward) by one click, while playing a track, skips to the next track or push the VR button and say "Next Track."
- Turning it counterclockwise (backward) by one click, will jump to the previous track in the list or push the VR button and say "Previous Track."
- Jump backward in the current track by pushing and holding the << **RW** button. Holding the << **RW** button long enough will jump to the beginning of the current track.
- Jump forward in the current track by pushing and holding the **FF** >> button.
- A single push backward << **RW** or forward **FF** >> will jump backward or forward respectively, for five seconds.
- Use the << **SEEK** and **SEEK** >> buttons to jump to the previous or next track. Pushing the **SEEK** >> button during play mode will jump to the next track in the list, or push the VR button and say "Next or Previous Track."
- While a track is playing, push the **INFO** button to see the associated metadata (artist, track title, album, etc.) for that track. Pushing the **INFO** button again jumps to the next screen of data for that track. Once all screens have been viewed, the last **INFO** button push will go back to the play mode screen on the radio.
- Pushing the **REPEAT** button will change the audio device mode to repeat the current playing track or push the VR button and say "Repeat ON" or "Repeat Off."
- Push the **SCAN** button to use AUX/USB/MP3 device scan mode, which will play the first ten seconds of each track in the current list and then forward to the next song. To stop SCAN mode and start playing the desired track, when it is playing the track, push the **SCAN** button again. During Scan mode, pushing the << **SEEK** and **SEEK** >> buttons will select the previous and next tracks.
- **RND** button (available on sales code RES radio only): Pushing this button toggles between Shuffle ON and Shuffle OFF modes for the iPod or external USB device, or push the VR button and say "Shuffle ON" or "Shuffle Off." If the **RND** icon is showing on the radio display, then the shuffle mode is ON.

List Or Browse Mode

During Play mode, pushing any of the buttons described below, will bring up List mode. List mode enables scrolling through the list of menus and tracks on the audio device.

TUNE control knob: The **TUNE** control knob functions in a similar manner as the scroll wheel on the audio device or external USB device.

- Turning it clockwise (forward) and counterclockwise (backward) scrolls through the lists, displaying the track detail on the radio display. Once the track to be played is highlighted on the radio display, push the **TUNE** control knob to select and start playing the track. Turning the **TUNE** control knob fast will scroll through the list faster. During fast scroll, a slight delay in updating the information on the radio display may be noticeable.

During all List modes, the iPod displays all lists in "wrap-around" mode. So if the track is at the bottom of the list, just turn the wheel backward (counterclockwise) to get to the track faster.

In List mode, the radio **PRESET** buttons are used as shortcuts to the following lists on the iPod or external USB device:

- Preset 1 – Playlists
- Preset 2 – Artists
- Preset 3 – Albums
- Preset 4 – Genres
- Preset 5 – Audiobooks
- Preset 6 – Podcasts

Pushing a PRESET button will display the current list on the top line and the first item in that list on the second line.

To exit List mode without selecting a track, push the same **PRESET** button again to go back to **Play mode**.

LIST button: The **LIST** button will display the top level menu of the iPod or external USB device.

- Turn the **TUNE** control knob to list the top-menu item to be selected and push the **TUNE** control knob. This will display the next sub-menu list item on the audio device, then follow the same steps to go to the desired track in that list. Not all iPod or external USB device sub-menu levels are available on this system.

MUSIC TYPE button: The **MUSIC TYPE** button is another shortcut button to the genre listing on your audio device.

WARNING!

Do not plug in or remove the iPod or external USB device while driving. Failure to follow this warning could result in an accident.

CAUTION!

- **Leaving the iPod or external USB device (or any supported device) anywhere in the vehicle in extreme heat or cold can alter the operation or damage the device. Follow the device manufacturer's guidelines.**
- **Placing items on the iPod or external USB device, or connections to the iPod or external USB device in the vehicle, can cause damage to the device and/or to the connectors.**

Bluetooth Streaming Audio (BTSA)

Music can be streamed from your cellular phone to the Uconnect phone system.

Refer to the Uconnect Owner's Manual Supplement for further information on Bluetooth connectivity.

Controlling BTSA Using Radio Buttons

To enter BTSA mode, push either "AUX" button on the radio or push the VR button and say "Bluetooth Streaming Audio."

Play Mode

When switched to BTSA mode, some audio devices can start playing music over the vehicle's audio system, but some devices require the music to be initiated on the device first, then it will get streamed to the Uconnect phone system. Seven devices can be paired to the Uconnect phone system, but just one can be selected and played.

Selecting A Different Audio Device

1. Push the Phone button to begin.
2. After the "Ready" prompt and following the beep, say "Setup", then say "Select Audio Devices."
3. Say the name of the audio device or ask the Uconnect phone system to list the audio devices.

Next Track

Use the SEEK UP button, or push the VR button on the radio and say "Next Track," to jump to the next music track on your cellular phone.

Previous Track

Use the SEEK DOWN button, or push the VR button on the radio and say "Previous Track," to jump to the previous music track on your cellular phone.

Browse

Browsing is not available on a Bluetooth Streaming Audio (BTSA) device. Only the current song that is playing will display info.

UCONNECT PHONE — IF EQUIPPED

Uconnect Phone is a voice-activated, hands-free, in-vehicle communications system. Uconnect Phone allows you to dial a phone number with your mobile phone* using simple voice commands (e.g., "Call" ... "Mike" ... "Work" or "Dial" ... "248-555-1212"). Your mobile phone's audio is transmitted through your vehicle's audio system; the system will automatically mute your radio when using the Uconnect Phone.

NOTE: The Uconnect Phone requires a mobile phone equipped with the Bluetooth "Hands-Free Profile," Version 0.96 or higher. See the Uconnect website for supported phones. For Uconnect customer support:

- U.S. residents - visit UconnectPhone.com or call 1-877-855-8400 (24 hours a day 7 days a week).
- Canadian Residents - visit UconnectPhone.com or call 1-800-465-2001 (English) or 1-800-387-9983 (French).
- Mon. – Fri., 8:00 am – 8:00 pm, ET
- Sat., 9:00 am – 5:00 pm, ET
- Sun., Closed

Uconnect Phone allows you to transfer calls between the system and your mobile phone as you enter or exit your vehicle and enables you to mute the system's microphone for private conversation.

The Uconnect Phone is driven through your Bluetooth "Hands-Free Profile" mobile phone. Uconnect features Bluetooth technology - the global standard that enables different electronic devices to connect to each other without wires or a docking station, so Uconnect Phone works no matter where you stow your mobile phone (be it your purse, pocket, or briefcase), as long as your phone is turned on and has been paired to the vehicle's Uconnect Phone. The Uconnect Phone allows up to seven mobile phones to be linked to the system. Only one linked (or paired) mobile phone can be used with the system at a time. The system is available in English, Spanish, or French languages.

The Uconnect Phone is driven through your Bluetooth "Hands-Free Profile" mobile phone. Uconnect features Bluetooth technology - the global standard that enables different electronic devices to connect to each other without wires or a docking station, so Uconnect Phone works no matter where you stow your mobile phone (be it your purse, pocket, or briefcase), as long as your phone is turned on and has been paired to the vehicle's Uconnect Phone. The Uconnect Phone allows up to seven mobile phones to be linked to the system. Only one linked (or paired) mobile phone can be used with the system at a time. The system is available in English, Spanish, or French languages.

WARNING!

ALWAYS drive safely with your hands on the wheel. You have full responsibility and assume all risks related to the use of the Uconnect features and applications in this vehicle. Only use Uconnect when it is safe to do so. Failure to do so may result in an accident involving serious injury or death.

Uconnect Phone Button

The radio or steering wheel controls (if equipped) will contain the two control buttons (Uconnect Phone button and Voice Command button) that will enable you to access the system. When you push the button you will hear the word Uconnect followed by a BEEP. The beep is your signal to give a command.

NOTE: The driver side upper windshield trim contains the microphone for the Uconnect Phone.

Voice Command Button

WARNING!

Any voice commanded system should be used only in safe driving conditions following all applicable laws. Your attention should be focused on safely operating the vehicle. Failure to do so may result in a collision causing serious injury or death.

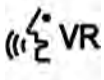

Actual button location may vary with the radio. The individual buttons are described in the "Operation" section.

The Uconnect Phone can be used with any Hands-Free Profile certified Bluetooth mobile phone. See the Uconnect

website for supported phones. Refer to your mobile service provider or the phone manufacturer for details.

The Uconnect Phone is fully integrated with the vehicle's audio system. The volume of the Uconnect Phone can be adjusted either from the radio volume control knob or from the steering wheel radio control (right switch), if so equipped.

The radio display will be used for visual prompts from the Uconnect Phone such as "CELL" or caller ID on certain radios.

Operation

Voice commands can be used to operate the Uconnect Phone and to navigate through the Uconnect Phone menu structure. Voice commands are required after most Uconnect Phone prompts. You will be prompted for a specific command and then guided through the available options.

- Prior to giving a voice command, one must wait for the beep, which follows the "Ready" prompt or another prompt.
- For certain operations, compound commands can be used. For example, instead of saying "Setup" and then "Phone Pairing," the following compound command can be said: "Setup Phone Pairing."
- For each feature explanation in this section, only the compound form of the voice command is given. You can also break the commands into parts and say each part of the command when you are asked for it. For example, you can use the compound form voice command "Phonebook New Entry," or you can break the compound form command into two voice commands: "Phonebook" and "New Entry." Please remember, the Uconnect Phone works best when you talk in a normal conversational tone, as if speaking to someone sitting a few feet/meters away from you.

Voice Command Tree

Refer to "Voice Tree" in this section.

Help Command

If you need assistance at any prompt, or if you want to know your options at any prompt, say "Help" following the beep. The Uconnect Phone will play all the options at any prompt if you ask for help.

To activate the Uconnect Phone from idle, simply push the Phone button and follow the audible prompts for directions. All Uconnect Phone sessions begin with a push of the Phone button on the faceplate.

Cancel Command

At any prompt, after the beep, you can say "Cancel" and you will be returned to the main menu. However, in a few instances the system will take you back to the previous menu.

Pair (Link) Uconnect Phone To A Mobile Phone

To begin using your Uconnect Phone, you must pair your compatible Bluetooth enabled mobile phone.

To complete the pairing process, you will need to reference your mobile phone Owner's Manual. The Uconnect website may also provide detailed instructions for pairing.

The following are general phone to Uconnect Phone pairing instructions:

- Push the Phone button to begin.
- After the "Ready" prompt and the following beep, say "Setup Phone Pairing."
- When prompted, after the beep, say "Pair a Phone" and follow the audible prompts.
- You will be asked to say a four-digit Personal Identification Number (PIN), which you will later need to enter into your mobile phone. You can enter any four-digit PIN. You will not need to remember this PIN after the initial pairing process.
- For identification purposes, you will be prompted to give the Uconnect Phone a name for your mobile phone. Each mobile phone that is paired should be given a unique phone name.
- You will then be asked to give your mobile phone a priority level between one and seven, with one being the highest priority. You can pair up to seven mobile phones to your Uconnect Phone. However, at any given time, only one mobile phone can be in use, connected to your Uconnect System. The priority allows the Uconnect Phone to know which mobile phone to use if multiple mobile phones are in the vehicle at the same time. For example, if priority three and priority five phones are present in the vehicle, the Uconnect Phone will use the priority three mobile phone when you make a call. You can select to use a lower priority mobile phone at any time (refer to "Advanced Phone Connectivity" in this section).

Dial By Saying A Number

- Push the Phone button to begin.
- After the "Ready" prompt and the following beep, say "Dial."
- The system will prompt you to say the number you want to call.
- For example, you can say "234-567-8901."
- The Uconnect Phone will confirm the phone number and then dial. The number will appear in the display of certain radios.

Call By Saying A Name

- Push the Phone button to begin.
- After the "Ready" prompt and the following beep, say "Call."
- The system will prompt you to say the name of the person you want to call.
- After the "Ready" prompt and the following beep, say the name of the person you want to call. For example, you can say "John Doe," where John Doe is a previously stored name entry in the Uconnect phonebook or downloaded phonebook. To learn how to store a name in the phonebook, refer to "Add Names To Your Uconnect Phonebook," in this section.
- The Uconnect system will confirm the name and then dial the corresponding phone number, which may appear in the display of certain radios.

Phonebook Download – Automatic Phonebook Transfer From Mobile Phone

If equipped and specifically supported by your phone, Uconnect Phone automatically downloads names (text names) and number entries from your mobile phone's phonebook. Specific Bluetooth Phones with Phone Book Access Profile may support this feature. See Uconnect website for supported phones.

- To call a name from downloaded (or Uconnect) Phonebook, follow the procedure in "Call by Saying a Name" section.
- Automatic download and update, if supported, begins as soon as the Bluetooth wireless phone connection is made to the Uconnect Phone, for example, after you start the vehicle.

- A maximum of 1,000 entries per phone will be downloaded and updated every time a phone is connected to the Uconnect Phone.
- Depending on the maximum number of entries downloaded, there may be a short delay before the latest downloaded names can be used. Until then, if available, the previous downloaded phonebook is available for use.
- Only the phonebook of the currently connected mobile phone is accessible.
- Only the mobile phone's phonebook is downloaded. SIM card phonebook is not part of the Mobile phonebook.
- This downloaded phonebook cannot be edited or deleted on the Uconnect Phone. These can only be edited on the mobile phone. The changes are transferred and updated to Uconnect Phone on the next phone connection.

Add Names To Your Uconnect Phonebook

NOTE: Adding names to the Uconnect Phonebook is recommended when the vehicle is not in motion.

- Push the Phone button to begin.
- After the "Ready" prompt and the following beep, say "Phonebook New Entry."
- When prompted, say the name of the new entry. Use of long names helps the Voice Command and it is recommended. For example, say "Robert Smith" or "Robert" instead of "Bob."
- When prompted, enter the number designation (e.g., "Home," "Work," "Mobile," or "Other"). This will allow you to store multiple numbers for each phonebook entry, if desired.
- When prompted, recite the phone number for the phonebook entry that you are adding.

After you are finished adding an entry into the phonebook, you will be given the opportunity to add more phone numbers to the current entry or to return to the main menu.

The Uconnect Phone will allow you to enter up to 32 names in the phonebook with each name having up to four associated phone numbers and designations. Each language has a separate 32-name phonebook accessible only in that language. In addition, if equipped and supported by your phone, Uconnect Phone automatically downloads your mobile phone's phonebook.

Edit Uconnect Phonebook Entries

- Push the Phone button to begin.
- After the "Ready" prompt and the following beep, say "Phonebook Edit."
- You will then be asked for the name of the phonebook entry that you wish to edit.
- Next, choose the number designation (home, work, mobile, or other) that you wish to edit.
- When prompted, recite the new phone number for the phonebook entry that you are editing.

After you are finished editing an entry in the phonebook, you will be given the opportunity to edit another entry in the phonebook, call the number you just edited, or return to the main menu.

NOTE:

- Editing names in the phonebook is recommended when the vehicle is not in motion.
- Automatic downloaded phonebook entries cannot be deleted or edited.

"Phonebook Edit" can be used to add another phone number to a name entry that already exists in the phonebook. For example, the entry John Doe may have a mobile and a home number, but you can add "John Doe's" work number later using the "Phonebook Edit" feature.

Delete Uconnect Phonebook Entry

NOTE: Editing phonebook entries is recommended when the vehicle is not in motion.

To delete a Uconnect phonebook entry using Voice Commands:

1. Push the Phone button to begin.
2. After the "Ready" prompt and the following beep, say "Phonebook Delete."
3. After you enter the Phonebook Delete menu, you will then be asked for the name of the entry that you wish to delete. You can either say the name of a phonebook entry that you wish to delete, or you can say "List Names" to hear a list of the entries in the phonebook from which you choose. To select one of the entries from the list, push the Voice Command button while the Uconnect Phone is playing the desired entry and say "Delete."

4. After you enter the name, the Uconnect Phone will ask you which designation you wish to delete: home, work, mobile, other, or all. Say the designation you wish to delete.
   - Note that only the phonebook entry in the current language is deleted.

NOTE: Automatic downloaded phonebook entries cannot be deleted or edited.

List All Names In The Uconnect Phonebook

- Push the Phone button to begin.
- After the "Ready" prompt and the following beep, say "Phonebook List Names."
- The Uconnect Phone will play the names of all the phonebook entries, including the downloaded phonebook entries, if available.
- To call one of the names in the list, push the Voice Command button during the playing of the desired name, and say "Call."

NOTE: The user can also exercise "Edit" or "Delete" operations at this point.

- The Uconnect Phone will then prompt you as to the number designation you wish to call.
- The selected number will be dialed.

Phone Call Features

The following features can be accessed through the Uconnect Phone if the feature(s) are available on your mobile service plan. For example, if your mobile service plan provides three-way calling, this feature can be accessed through the Uconnect Phone. Check with your mobile service provider for the features that you have.

Answer Or Reject An Incoming Call — No Call Currently In Progress

When you receive a call on your mobile phone, the Uconnect Phone will interrupt the vehicle audio system, if on, and will ask if you would like to answer the call. Push the Phone button to accept the call. To reject the call, push and hold the Phone button until you hear a single beep, indicating that the incoming call was rejected.

Answer Or Reject An Incoming Call — Call Currently In Progress

If a call is currently in progress and you have another incoming call, you will hear the same network tones for call waiting that you normally hear when using your

mobile phone. Push the Phone button to place the current call on hold and answer the incoming call.

NOTE: The Uconnect Phone compatible phones in the market today do not support rejecting an incoming call when another call is in progress. Therefore, the user can only answer an incoming call or ignore it.

Making A Second Call While Current Call Is In Progress

To make a second call while you are currently on a call, push the Voice Command button and say "Dial" or "Call" followed by the phone number or phonebook entry you wish to call. The first call will be on hold while the second call is in progress. To go back to the first call, refer to "Toggling Between Calls" in this section. To combine two calls, refer to "Conference Call" in this section.

Place/Retrieve A Call From Hold

To put a call on hold, push the Phone button until you hear a single beep. This indicates that the call is on hold. To bring the call back from hold, push and hold the Phone button until you hear a single beep.

Toggling Between Calls

If two calls are in progress (one active and one on hold), push the Phone button until you hear a single beep, indicating that the active and hold status of the two calls have switched. Only one call can be placed on hold at a time.

Conference Call

When two calls are in progress (one active and one on hold):

1. Push and hold the Phone button until you hear a double beep, indicating that the two calls have been joined into one conference call.

Three-Way Calling

To initiate three-way calling, push the Voice Command button while a call is in progress, and make a second phone call, as described under "Making a Second Call While Current Call is in Progress." After the second call has established, push and hold the Phone button until you hear a double beep, indicating that the two calls have been joined into one conference call.

Call Termination

To end a call in progress:

1. Momentarily push the Phone button.
   - Only the active call(s) will be terminated and if there is a call on hold, it will become the new active call. If the active call is terminated by the phone far end, a call on hold may not become active automatically. This is cell phone-dependent.
2. To bring the call back from hold, push and hold the Phone button until you hear a single beep.

Redial

To redial the last number called from your mobile phone using Voice Command:

1. Push the Phone button to begin.
2. After the "Ready" prompt and the following beep, say "Redial."
   - The Uconnect Phone will call the last number that was dialed from your mobile phone.

NOTE: This may not be the last number dialed from the Uconnect Phone.

Call Continuation

Call continuation is the progression of a phone call on the Uconnect Phone after the vehicle ignition has been switched to OFF. Call continuation functionality available on the vehicle can be any one of three types:

1. After the ignition is switched to OFF, a call can continue on the Uconnect Phone either until the call ends, or until the vehicle battery condition dictates cessation of the call on the Uconnect Phone and transfer of the call to the mobile phone.
2. After the ignition is cycled to OFF, a call can continue on the Uconnect Phone for a certain duration, after which the call is automatically transferred from the Uconnect Phone to the mobile phone.
3. An active call is automatically transferred to the mobile phone after the ignition is cycled to OFF.

Uconnect Phone Features

Language Selection

To change the language that the Uconnect Phone is using:

- Push the Phone button to begin.

- After the "Ready" prompt and the following beep, say the name of the language you wish to switch to English, Espanol, or Francais.
- Continue to follow the system prompts to complete the language selection.

After selecting one of the languages, all prompts and voice commands will be in that language.

NOTE: After every Uconnect Phone language change operation, only the language-specific 32-name phonebook is usable. The paired phone name is not language-specific and usable across all languages.

Emergency Assistance

If you are in an emergency and the mobile phone is reachable:

- Pick up the phone and manually dial the emergency number for your area.

If the phone is not reachable and the Uconnect Phone is operational, you may reach the emergency number as follows:

- Push the Phone button to begin.
- After the "Ready" prompt and the following beep, say "Emergency" and the Uconnect Phone will instruct the paired mobile phone to call the emergency number.

NOTE:

- The emergency number dialed is based on the country where the vehicle is purchased (911 for the U.S. and Canada and 060 for Mexico). The number dialed may not be applicable with the available mobile service and area.
- If supported, this number may be programmable on some systems. To do this, push the Phone button and say "Setup," followed by "Emergency."
- The Uconnect Phone does slightly lower your chances of successfully making a phone call as to that for the mobile phone directly.

WARNING!

To use your Uconnect Phone System in an emergency, your mobile phone must be:
- **Turned on.**
- **Paired to the Uconnect System.**
- **Have network coverage.**

Roadside Assistance/Towing Assistance

If you need roadside assistance:

- Push the Phone button to begin.
- After the "Ready" prompt and the following beep, say "Towing Assistance."

NOTE: You should program the desired Towing Assistance phone number using the Voice Command system. To do this, push the Phone button and say "Setup," followed by "Towing Assistance." When prompted say 1-800-521-2779 for U.S., 1-800-363-4869 for Canada, 55-14-3454 for Mexico City and 1-800-712-3040 for outside Mexico City in Mexico.

Paging

To learn how to page, refer to "Working With Automated Systems." Paging works properly except for pagers of certain companies, which time out a little too soon to work properly with the Uconnect Phone.

Voice Mail Calling

To learn how to access your voice mail, refer to "Working With Automated Systems."

Working With Automated Systems

This method is used in instances where one generally has to press numbers on the mobile phone keypad while navigating through an automated telephone system.

You can use your Uconnect Phone to access a voice mail system or an automated service, such as a paging service or automated customer service line. Some services require immediate response selection. In some instances, that may be too quick for use of the Uconnect Phone.

When calling a number with your Uconnect Phone that normally requires you to enter in a touch-tone sequence on your mobile phone keypad, you can push the Voice Command button and say the sequence you wish to enter, followed by the word "Send." For example, if required to enter your PIN followed with a pound, (3 7 4 6 #), you can push the Voice Command button and say, "3 7 4 6 # Send." Saying a number, or sequence of numbers, followed by "Send," is also to be used for navigating through an automated customer service center menu structure, and to leave a number on a pager.

You can also send stored Uconnect Phonebook entries as tones for fast and easy access to voice mail and pager entries. To use this feature, dial the number you wish to call and then push the Voice Command button and say,

"Send." The system will prompt you to enter the name or number and say the name of the phonebook entry you wish to send. The Uconnect Phone will then send the corresponding phone number associated with the phonebook entry, as tones over the phone.

NOTE:

- You may not hear all of the tones due to mobile phone network configurations. This is normal.
- Some paging and voice mail systems have system time out settings that are too short and may not allow the use of this feature.

Barge In – Overriding Prompts

The "Voice Command" button can be used when you wish to skip part of a prompt and issue your voice command immediately. For example, if a prompt is asking "Would you like to pair a phone, clear a...," you could push the Voice Command button and say, "Pair a Phone" to select that option without having to listen to the rest of the voice prompt.

Turning Confirmation Prompts On/Off

Turning confirmation prompts off will stop the system from confirming your choices (e.g., the Uconnect Phone will not repeat a phone number before you dial it).

To turn confirmation prompts on or off using Voice Command:

1. Push the Phone button to begin.
2. After the "Ready" prompt and the following beep, say:
   - "Setup Confirmations Prompts On"
   - "Setup Confirmations Prompts Off"

Phone And Network Status Indicators

If available on the radio and/or on a premium display such as the instrument panel cluster, and supported by your mobile phone, the Uconnect Phone will provide notification to inform you of your phone and network status when you are attempting to make a phone call using Uconnect Phone. The status is given for roaming, network signal strength, phone battery strength, etc.

Dialing Using The Mobile Phone Keypad

You can dial a phone number with your mobile phone keypad and still use the Uconnect Phone (while dialing via

the mobile phone keypad, the user must exercise caution and take precautionary safety measures). By dialing a number with your paired Bluetooth mobile phone, the audio will be played through your vehicles audio system. The Uconnect Phone will work the same as if you dial the number using Voice Command.

NOTE: Certain brands of mobile phones do not send the dial ring to the Uconnect Phone to play it on the vehicle audio system, so you will not hear it. Under this situation, after successfully dialing a number the user may feel that the call did not go through even though the call is in progress. Once your call is answered, you will hear the audio.

Mute/Un-Mute (Mute ON/OFF)

When you mute the Uconnect Phone, you will still be able to hear the conversation coming from the other party, but the other party will not be able to hear you. To mute the Uconnect Phone:

- Push the Voice Command button.
- Following the beep, say "Mute."

To un-mute the Uconnect Phone:

- Push the Voice Command button.
- Following the beep, say "Mute off."

Advanced Phone Connectivity

Transfer Call To And From Mobile Phone

The Uconnect Phone allows ongoing calls to be transferred from your mobile phone to the Uconnect Phone without terminating the call. To transfer an ongoing call from your Uconnect Phone paired mobile phone to the Uconnect Phone or vice versa, push the Voice Command button and say "Transfer Call."

Connect Or Disconnect Link Between The Uconnect Phone And Mobile Phone

Your mobile phone can be paired with many different electronic devices, but can only be actively "connected" with one electronic device at a time.

If you would like to connect or disconnect the Bluetooth connection between a Uconnect Phone paired mobile phone and the Uconnect Phone, follow the instructions described in your mobile phone user manual.

List Paired Mobile Phone Names

- Push the Phone button to begin.
- After the "Ready" prompt and the following beep, say "Setup Phone Pairing."

- When prompted, say "List Phones."
- The Uconnect Phone will play the phone names of all paired mobile phones in order from the highest to the lowest priority. To "Select" or "Delete" a paired phone being announced, push the Voice Command button and say "Select" or "Delete." Also, see the next two sections for an alternate way to "Select" or "Delete" a paired phone.

Select Another Mobile Phone

This feature allows you to select and start using another phone paired with the Uconnect Phone.

- Push the Phone button to begin.
- After the "Ready" prompt and the following beep, say "Setup Select Phone" and follow the prompts.
- You can also push the Voice Command button at any time while the list is being played, and then choose the phone that you wish to select.
- The selected phone will be used for the next phone call. If the selected phone is not available, the Uconnect Phone will return to using the highest priority phone present in or near (approximately within 30 ft (9 m) the vehicle.

Delete Uconnect Phone Paired Mobile Phones

- Push the Phone button to begin.
- After the "Ready" prompt and the following beep, say "Setup Phone Pairing."
- At the next prompt, say "Delete" and follow the prompts.
- You can also push the Voice Command button at any time while the list is being played, and then choose the phone you wish to delete.

Things You Should Know About Your Uconnect Phone

Uconnect Phone Tutorial

To hear a brief tutorial of the system features, push the Phone button and say "Uconnect Tutorial."

Voice Training

For users experiencing difficulty with the system recognizing their voice commands or numbers, the Uconnect Phone Voice Training feature may be used. To enter this training mode, follow one of the two following procedures:

- From outside the Uconnect Phone mode (e.g., from radio mode), push and hold the Voice Command button for five seconds until the session begins, or,
- Push the Voice Command button and say the "Voice Training," "System Training," or "Start Voice Training" command.

You can either push the Uconnect Phone button to restore the factory setting or repeat the words and phrases when prompted by the Uconnect Phone. For best results, the Voice Training session should be completed when the vehicle is parked with the engine running, all windows closed, and the blower fan switched off.

This procedure may be repeated with a new user. The system will adapt to the last trained voice only.

Reset

To Reset all settings using Voice Command:

1. Push the Phone button.
2. After the "Ready" prompt and the following beep, say "Setup," then "Reset."
   - This will delete all phone pairing, phone book entries, and other settings in all language modes. The System will prompt you before resetting to factory settings.

Voice Command

For best performance:

- Adjust the rearview mirror to provide at least ½ inch (1 cm) gap between the overhead console (if equipped) and the mirror.
- Always wait for the beep before speaking.
- Speak normally without pausing, just as you would speak to a person sitting a few feet/meters away from you.
- Make sure that no one other than you is speaking during a Voice Command period.

Performance is maximized under:

- Low-to-medium blower setting
- Low-to-medium vehicle speed
- Low road noise
- Smooth road surface
- Fully closed windows
- Dry weather condition

NOTE:

- Even though the system is designed for users speaking in North American English, French, and Spanish accents, the system may not always work for some.
- When navigating through an automated system such as voice mail, or when sending a page, at the end of speaking the digit string, make sure to say "Send."
- Storing names in the phonebook when the vehicle is not in motion is recommended.
- It is not recommended to store similar sounding names in the Uconnect Phonebook.
- Phonebook (Downloaded and Uconnect Phone Local) name recognition rate is optimized when the entries are not similar.
- Numbers must be spoken in single digits. "800" must be spoken "eight-zero-zero" not "eight hundred."
- You can say "O" (letter "O") for "0" (zero).
- Even though international dialing for most number combinations is supported, some shortcut dialing number combinations may not be supported.

Far End Audio Performance

Audio quality is maximized under:

- Low-to-medium blower setting
- Low-to-medium vehicle speed
- Low road noise
- Smooth road surface
- Fully closed windows
- Dry weather conditions
- Operation from the driver's seat
- Performance, such as audio clarity, echo, and loudness to a large degree rely on the phone and network, and not the Uconnect Phone
- Echo at the phone far end can sometimes be reduced by lowering the in-vehicle audio volume

Recent Calls

If your phone supports "Automatic Phonebook Download," Uconnect Phone can list your Outgoing, Incoming and Missed Calls.

Voice Text Reply

Uconnect Phone can read or send new messages on your phone.

Read Messages:

If you receive a new text message while your phone is connected to Uconnect Phone, an announcement will be made to notify you that you have a new text message. If you wish to hear the new message:

- Push the Phone button.
- After the "Ready" prompt and the following beep, say "SMS Read" or "Read Messages."
- Uconnect Phone will play the new text message for you.

After reading a message, you can "Reply" or "Forward" the message using Uconnect Phone.

Send Messages:

You can send messages using Uconnect Phone. To send a new message:

- Push the Phone button.
- After the "Ready" prompt and the following beep, say "SMS Send" or "Send Messages."
- You can either say the message you wish to send or say "List Messages." There are 20 preset messages.

To send a message, push the Voice Command button while the system is listing the message and say "Send."

Uconnect Phone will prompt you to say the name or number of the person you wish to send the message to.

List of Preset Messages:

1. Yes
2. No
3. Where are you?
4. I need more direction
5. L O L
6. Why
7. I love you
8. Call me
9. Call me later
10. Thanks
11. See you in 15 minutes

12. I am on my way
13. I'll be late
14. Are you there yet?
15. Where are we meeting?
16. Can this wait?
17. Bye for now
18. When can we meet?
19. Send number to call
20. Start without me

Turn SMS Incoming Announcement ON/OFF

Turning the SMS Incoming Announcement OFF will stop the system from announcing the new incoming messages.

- Push the Phone button.
- After the "Ready" prompt and the following beep, say "Setup, Incoming Message Announcement," you will then be given a choice to change it.

Bluetooth Communication Link

Mobile phones have been found to lose connection to the Uconnect Phone. When this happens, the connection can generally be reestablished by switching the phone off/on. Your mobile phone is recommended to remain in Bluetooth ON mode.

Power-Up

After switching the ignition key from OFF to either the ON or ACC position, or after a language change, you must wait at least 15 seconds prior to using the system.

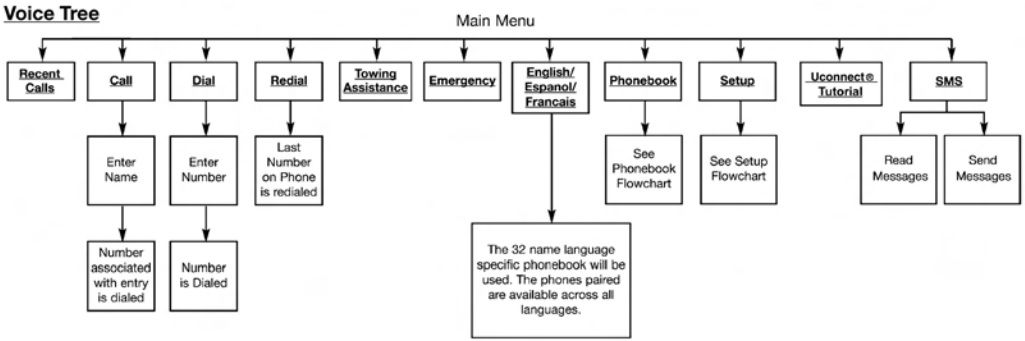

Note: **Available Voice commands are shown in bold face and are underlined.**

030772523

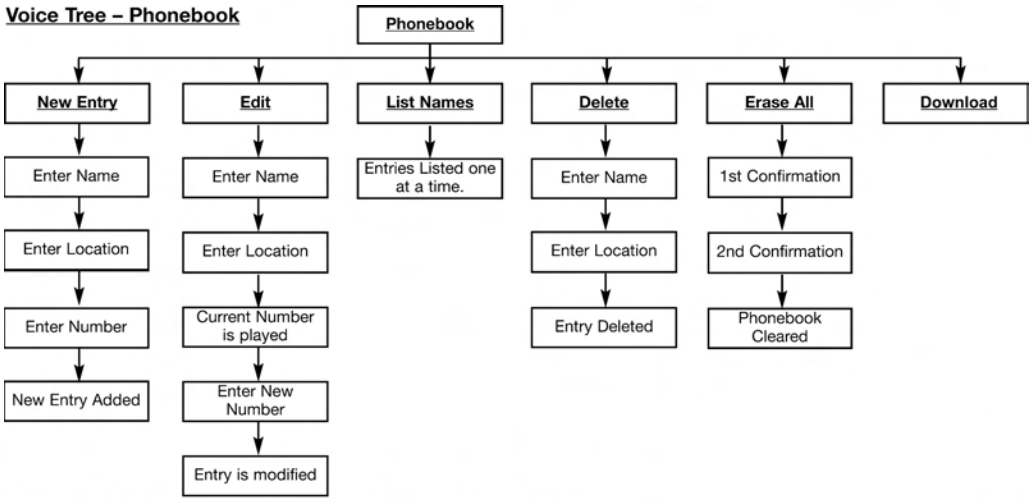

Note: Available Voice commands are shown in bold face and are underlined.

81c6bf80

Voice Tree – Setup

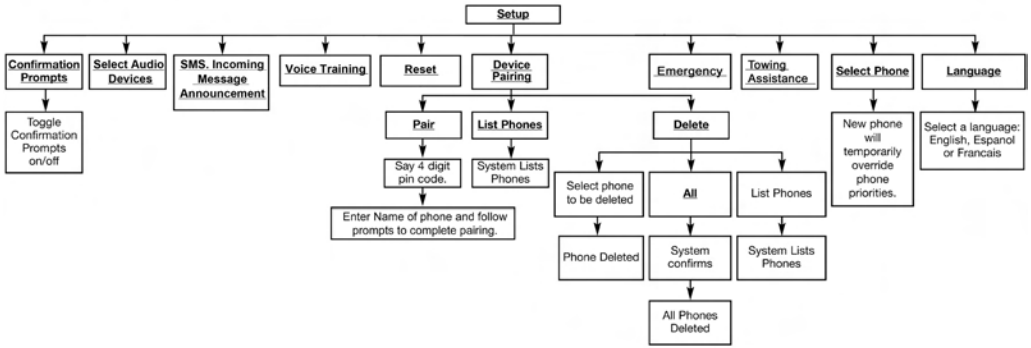

Note: Available Voice commands are shown in bold face and are underlined. 030605540

Voice Commands

Primary	Alternate (s)
zero	
one	
two	
three	
four	
five	
six	
seven	
eight	
nine	
star (*)	
plus (+)	
pound (#)	
add location	
all	
call	
cancel	
confirmation prompts	
continue	

Primary	Alternate (s)
delete	
dial	
download	
edit	
emergency	
English	
erase all	
Espanol	
Francais	
help	
home	
language	
list names	
list phones	
mobile	
mute	
mute off	
new entry	
no	
other	

Primary	Alternate (s)
pair a phone	
phone pairing	pairing
phonebook	phone book
previous	
record again	
redial	
return to main menu	return or main menu
select phone	select
send	
set up	phone settings or phone set up
towing assistance	
transfer call	
Uconnect Tutorial	
voice training	
work	
yes	

General Information

The following regulatory statement applies to all radio frequency (RF) devices equipped in this vehicle: This device complies with Part 15 of the FCC Rules and with Industry Canada license-exempt RSS standard(s). Operation is subject to the following two conditions: (1) This device may not cause harmful interference, and (2) This device must accept any interference received, including interference that may cause undesired operation.

NOTE: Changes or modifications not expressly approved by the party responsible for compliance could void the user's authority to operate the equipment.

VOICE COMMAND — IF EQUIPPED

Voice Command System Operation

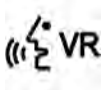

The Uconnect Voice Command system allows you to control your AM, FM radio, disk player, USB mass storage class device, iPod family of devices, Bluetooth Streaming Audio Device, satellite radio, and a memo recorder.

NOTE: Take care to speak into the Voice Interface System as calmly and normally as possible. The ability of the Voice Interface System to recognize user voice commands may be negatively affected by rapid speaking or a raised voice level.

WARNING!

Any voice commanded system should be used only in safe driving conditions following all applicable laws. Your attention should be focused on safely operating the vehicle. Failure to do so may result in a collision causing serious injury or death.

When you push the Voice Command button, you will hear a beep. The beep is your signal to give a command.

NOTE: If you do not say a command within a few seconds, the system will present you with a list of options.

If you would like to interrupt the system while it lists options, push the Voice Command button, listen for the beep, and say your command.

Pushing the Voice Command button while the system is speaking is known as "barging in." The system will be interrupted, and after the beep, you can add or change commands. This will become helpful once you start to learn the options.

NOTE: At any time, you can say the words "Cancel," "Help" or "Main Menu."

These commands are universal and can be used from any menu. All other commands can be used depending upon the active application.

When using this system, you should speak clearly and at a normal speaking volume.

The system will best recognize your speech if the windows are closed, and the heater/air conditioning blower is set to low.

At any point, if the system does not recognize one of your commands, you will be prompted to repeat it.

To hear the first available Menu, push the Voice Command button and say "Help" or "Main Menu."

Commands

The Voice Command system understands two types of commands, Universal commands and Local commands. Universal commands are available at all times. Local commands are available if the supported radio mode is active.

Changing The Volume

1. Start a dialogue by pushing the Voice Command button.

2. Say a command (e.g., “Help”).
3. Use the ON/OFF VOLUME rotary knob to adjust the volume to a comfortable level while the Voice Command system is speaking. Please note the volume setting for Voice Command is different than the audio system.

Main Menu

Start a dialogue by pushing the Voice Command button. You may say “Main Menu” to switch to the main menu.

In this mode, you can say the following commands:

- “Radio AM” (to switch to the radio AM mode)
- “Radio FM” (to switch to radio FM mode)
- “Sat” (to switch to Satellite radio mode)
- “Disc” (to switch to the disc mode)
- “USB” (to switch to USB mode)
- “Bluetooth Streaming” (to switch to Bluetooth Streaming mode)
- “Memo” (to switch to the memo recorder)
- “System Setup” (to switch to system setup)

Radio AM

To switch to the AM band, say “AM” or “Radio AM.” In this mode, you may say the following commands:

- “Frequency #” (to change the frequency)
- “Next Station” (to select the next station)
- “Previous Station” (to select the previous station)
- “Radio Menu” (to switch to the radio menu)
- “Main Menu” (to switch to the main menu)

Radio FM

To switch to the FM band, say “FM” or “Radio FM.” In this mode, you may say the following commands:

- “Frequency #” (to change the frequency)
- “Next Station” (to select the next station)
- “Previous Station” (to select the previous station)
- “Menu Radio” (to switch to the radio menu)
- “Main Menu” (to switch to the main menu)

Satellite Radio

To switch to satellite radio mode, say “Sat” or “Satellite Radio.” In this mode, you may say the following commands:

- “Channel Number” (to change the channel by its spoken number)
- “Next Channel” (to select the next channel)
- “Previous Channel” (to select the previous channel)
- “List Channel” (to hear a list of available channels)
- “Select Name” (to say the name of a channel)
- “Menu Radio” (to switch to the radio menu)
- “Main Menu” (to switch to the main menu)

Disc Mode

To switch to the disc mode, say “Disc.” In this mode, you may say the following commands:

- “Track” (#) (to change the track)
- “Next Track” (to play the next track)
- “Previous Track” (to play the previous track)
- “Main Menu” (to switch to the main menu)

USB Mode

To switch to USB mode, say “USB.” In this mode, you may say the following commands:

- “Next Track” (to play the next track)
- “Previous Track” (to play the previous track)
- “Play” (to play an Artist Name, Playlist Name, Album Name, Track Name, etc.)

Bluetooth Streaming (BT) Mode

To switch to Bluetooth Streaming (BT) mode, say “Bluetooth Streaming.” In this mode, you may say the following commands:

- “Play” (to play the current track)
- “Pause” (to pause the current track)
- “Next Track” (to play the next track)
- “Previous Track” (to play the previous track)

Memo Mode

To switch to the voice recorder mode, say “Memo.” In this mode, you may say the following commands:

- "New Memo" (to record a new memo) — During the recording, you may push the Voice Command button to stop recording. You proceed by saying one of the following commands:
  - "Save" (to save the memo)
  - "Continue" (to continue recording)
  - "Delete" (to delete the recording)
- "Play Memos" (to play previously recorded memos) — During the playback you may push the Voice Command button to stop playing memos. You proceed by saying one of the following commands:
  - "Repeat" (to repeat a memo)
  - "Next" (to play the next memo)
  - "Previous" (to play the previous memo)
  - "Delete" (to delete a memo)
  - "Delete All" (to delete all memos)

Setup

To switch to system setup, you may say one of the following:

- "Change to setup"
- "Switch to system setup"
- "Main menu setup"
- "Switch to setup"

In this mode, you may say the following commands:

- "Language English"
- "Language French"
- "Language Spanish"
- "Tutorial"
- "Voice Training"

NOTE: Keep in mind that you have to push the Voice Command button first and wait for the beep before speaking the "Barge In" commands.

Voice Training

For users experiencing difficulty with the system recognizing their voice commands or numbers the Uconnect Voice "Voice Training" feature may be used.

1. Push the Voice Command button, say "System Setup" and once you are in that menu then say "Voice Training." This will train your own voice to the system and will improve recognition.

2. Repeat the words and phrases when prompted by Uconnect Voice. For best results, the "Voice Training" session should be completed when the vehicle is parked, engine running, all windows closed, and the blower fan switched off. This procedure may be repeated with a new user. The system will adapt to the last trained voice only.

RADIO OPERATION AND MOBILE PHONES

Under certain conditions, the mobile phone being on in your vehicle can cause erratic or noisy performance from your radio. This condition may be lessened or eliminated by relocating the mobile phone antenna. This condition is not harmful to the radio. If your radio performance does not satisfactorily "clear" by the repositioning of the antenna, it is recommended that the radio volume be turned down or off during mobile phone operation when not using Uconnect (if equipped).

Regulatory And Safety Information

USA/CANADA

Exposure to Radio Frequency Radiation

The radiated output power of the internal wireless radio is far below the FCC radio frequency exposure limits. Nevertheless, the wireless radio will be used in such a manner that the radio is 20 cm or further from the human body.

The internal wireless radio operates within guidelines found in radio frequency safety standards and recommendations, which reflect the consensus of the scientific community.

The radio manufacturer believes the internal wireless radio is safe for use by consumers. The level of energy emitted is far less than the electromagnetic energy emitted by wireless devices such as mobile phones. However, the use of wireless radios may be restricted in some situations or environments, such as aboard airplanes. If you are unsure of restrictions, you are encouraged to ask for authorization before turning on the wireless radio.

This device complies with Part 15 of the FCC Rules and with Industry Canada license-exempt RSS standard(s). Operation is subject to the following two conditions:

1. This device may not cause harmful interference.
2. This device must accept any interference received, including interference that may cause undesired operation.

NOTE:

- This equipment has been tested and found to comply with the limits for a Class B digital device, pursuant to Part 15 of the FCC Rules. These limits are designed to provide reasonable protection against harmful interference in a residential installation. This equipment generates, uses and can radiate radio frequency energy and, if not installed and used in accordance with the instructions, may cause harmful interference to radio communications. However, there is no guarantee that interference will not occur in a particular installation.
- If this equipment does cause harmful interference to radio or television reception, which can be determined by turning the equipment off and on, the user is encouraged to try to correct the interference by one or more of the following measures:
  1. Increase the separation between the equipment and receiver.
  2. Consult the dealer or an experienced radio technician for help.

CD/DVD DISC MAINTENANCE

To keep a CD/DVD in good condition, take the following precautions:

1. Handle the disc by its edge; avoid touching the surface.
2. If the disc is stained, clean the surface with a soft cloth, wiping from center to edge.
3. Do not apply paper or tape to the disc; avoid scratching the disc.
4. Do not use solvents such as benzene, thinner, cleaners, or anti-static sprays.
5. Store the disc in its case after playing.
6. Do not expose the disc to direct sunlight.
7. Do not store the disc where temperatures may become too high.

NOTE: If you experience difficulty in playing a particular disc, it may be damaged (e.g., scratched, reflective coating removed, a hair, moisture or dew on the disc) oversized, or have protection encoding. Try a known good disc before considering disc player service.

CUSTOMER ASSISTANCE

CONTENTS

- SUGGESTIONS FOR OBTAINING SERVICE FOR YOUR VEHICLE 404
  - Prepare For The Appointment 404
  - Prepare A List 404
  - Be Reasonable With Requests 404
- IF YOU NEED ASSISTANCE 404
  - FCA US LLC Customer Center 405
  - FCA Canada Inc. Customer Center. 405
  - In Mexico Contact 405
  - Puerto Rico And U.S. Virgin Islands. 405
  - Customer Assistance For The Hearing Or Speech Impaired (TDD/TTY) 405
  - Service Contract 406
- WARRANTY INFORMATION 406
- MOPAR PARTS 407
- REPORTING SAFETY DEFECTS 407
  - In The 50 United States And Washington, D.C. . .407
  - In Canada 407
- PUBLICATION ORDER FORMS 407

SUGGESTIONS FOR OBTAINING SERVICE FOR YOUR VEHICLE

Prepare For The Appointment

If you are having warranty work done, be sure to have the right papers with you. Take your warranty folder. All work to be performed may not be covered by the warranty. Discuss additional charges with the service manager. Keep a maintenance log of your vehicle's service history. This can often provide a clue to the current problem.

Prepare A List

Make a written list of your vehicle's problems or the specific work you want done. If you've had an accident or work done that is not on your maintenance log, let the service advisor know.

Be Reasonable With Requests

If you list a number of items and you must have your vehicle by the end of the day, discuss the situation with the service advisor and list the items in order of priority. At many authorized dealers, you may obtain a rental vehicle at a minimal daily charge. If you need a rental, it is advisable to make these arrangements when you call for an appointment.

IF YOU NEED ASSISTANCE

The manufacturer and its authorized dealer are vitally interested in your satisfaction. We want you to be happy with our products and services.

Warranty service must be done by an authorized dealer. We strongly recommend that you take the vehicle to an authorized dealer. They know your vehicle the best, and are most concerned that you get prompt and high quality service. The manufacturer's authorized dealer have the facilities, factory-trained technicians, special tools, and the latest information to ensure the vehicle is fixed correctly and in a timely manner.

This is why you should always talk to an authorized dealer service manager first. Most matters can be resolved with this process.

- If for some reason you are still not satisfied, talk to the general manager or owner of the authorized dealer. They want to know if you need assistance.
- If an authorized dealer is unable to resolve the concern, you may contact the manufacturer's customer center.

Any communication to the manufacturer's customer center should include the following information:

- Owner's name and address

- Owner's telephone number (home and office)
- Authorized dealer name
- Vehicle Identification Number (VIN)
- Vehicle delivery date and mileage

FCA US LLC Customer Center

P.O. Box 21–8004

Auburn Hills, MI 48321–8004

Phone: (800) 247-9753

FCA Canada Inc. Customer Center

P.O. Box 1621

Windsor, Ontario N9A 4H6

Phone: (800) 465-2001 English / (800) 387-9983 French

In Mexico Contact

Av. Prolongacion Paseo de la Reforma, 1240

Sante Fe C.P. 05109

Mexico, D. F.

In Mexico City: 5081-7568

Outside Mexico City: 1-800-505-1300

Puerto Rico And U.S. Virgin Islands

Customer Service Chrysler International Services LLC

P.O. Box 191857

San Juan 00919-1857

Tel.: (787) 782-5757

Fax: (787) 782-3345

Customer Assistance For The Hearing Or Speech Impaired (TDD/TTY)

To assist customers who have hearing difficulties, the manufacturer has installed special TDD (Telecommunication Devices for the Deaf) equipment at its customer center. Any hearing or speech impaired customer, who has access to a TDD or a conventional teletypewriter (TTY) in the United States, can communicate with the manufacturer by dialing 1-800-380-CHRY.

Canadian residents with hearing difficulties that require assistance can use the special needs relay service offered by Bell Canada. For TTY teletypewriter users, dial 711 and for Voice callers, dial 1-800-855-0511 to connect with a Bell Relay Service operator.

Service Contract

You may have purchased a service contract for a vehicle to help protect you from the high cost of unexpected repairs after the manufacturer's New Vehicle Limited Warranty expires. The manufacturer stands behind only the manufacturer's service contracts. If you purchased a manufacturer's service contract, you will receive Plan Provisions and an Owner Identification Card in the mail within three weeks of the vehicle delivery date. If you have any questions about the service contract, call the manufacturer's Service Contract National Customer Hotline at 1-800-521-9922 (Canadian residents, call (800) 465-2001 English / (800) 387-9983 French).

The manufacturer will not stand behind any service contract that is not the manufacturer's service contract. It is not responsible for any service contract other than the manufacturer's service contract. If you purchased a service contract that is not a manufacturer's service contract, and you require service after the manufacturer's New Vehicle Limited Warranty expires, please refer to the contract documents, and contact the person listed in those documents.

We appreciate that you have made a major investment when you purchased the vehicle. An authorized dealer has also made a major investment in facilities, tools, and training to assure that you are absolutely delighted with the ownership experience. You will be pleased with their sincere efforts to resolve any warranty issues or related concerns.

WARNING!

Engine exhaust (internal combustion engines only), some of its constituents, and certain vehicle components contain, or emit, chemicals known to the State of California to cause cancer and birth defects, or other reproductive harm. In addition, certain fluids contained in vehicles and certain products of component wear contain, or emit, chemicals known to the State of California to cause cancer and birth defects, or other reproductive harm.

WARRANTY INFORMATION

See the Warranty Information Booklet, located in the owner's information kit, for the terms and provisions of FCA US LLC warranties applicable to this vehicle and market.

MOPAR PARTS

Mopar fluids, lubricants, parts, and accessories are available from an authorized dealer. They are recommended for your vehicle in order to help keep the vehicle operating at its best.

REPORTING SAFETY DEFECTS

In The 50 United States And Washington, D.C.

If you believe that your vehicle has a defect that could cause a crash or cause injury or death, you should immediately inform the National Highway Traffic Safety Administration (NHTSA) in addition to notifying FCA US LLC.

If NHTSA receives similar complaints, it may open an investigation, and if it finds that a safety defect exists in a group of vehicles, it may order a recall and remedy campaign. However, NHTSA cannot become involved in individual problems between you, your authorized dealer or FCA US LLC.

To contact NHTSA, you may call the Vehicle Safety Hotline toll free at 1-888-327-4236 (TTY: 1-800-424-9153); or go to http://www.safercar.gov; or write to: Administrator, NHTSA, 1200 New Jersey Avenue, SE., West Building, Washington, D.C. 20590. You can also obtain other information about motor vehicle safety from http://www.safercar.gov.

In Canada

If you believe that your vehicle has a safety defect, you should contact the Customer Service Department immediately. Canadian customers who wish to report a safety defect to the Canadian government should contact Transport Canada, Motor Vehicle Defect Investigations and Recalls at 1-800-333-0510 or go to http://www.tc.gc.ca/roadsafety/.

PUBLICATION ORDER FORMS

To order the following manuals, you may use either the website or the phone numbers listed below. Visa, Mastercard, American Express, and Discover orders are accepted.

Service Manuals

These comprehensive Service Manuals provide the information that students and professional technicians need in diagnosing/troubleshooting, problem solving, maintaining, servicing, and repairing FCA US LLC vehicles. A

complete working knowledge of the vehicle, system, and/or components is written in straightforward language with illustrations, diagrams, and charts.

Diagnostic Procedure Manuals

Diagnostic Procedure Manuals are filled with diagrams, charts and detailed illustrations. These practical manuals make it easy for students and technicians to find and fix problems on computer-controlled vehicle systems and features. They show exactly how to find and correct problems the first time, using step-by-step troubleshooting and drivability procedures, proven diagnostic tests and a complete list of all tools and equipment.

Owner's Manuals

These Owner's Manuals have been prepared with the assistance of service and engineering specialists to acquaint you with specific FCA US LLC vehicles. Included are starting, operating, emergency and maintenance procedures as well as specifications, capabilities and safety tips.

Call toll free at:

- **1-800-890-4038 (U.S.)**
- **1-800-387-1143 (Canada)**

Or

Visit us on the Worldwide Web at:

- www.techauthority.com

INDEX

Adding Engine Coolant (Antifreeze) 298
Adding Fuel 223
Adding Washer Fluid. 289
Additives, Fuel 339
Adjust
  Down 37
  Forward 37
  Rearward 37
  Up 37
Air Bag 165
  Air Bag Operation 167
  Air Bag Warning Light 164
  Enhanced Accident Response 173, 278
  Event Data Recorder (EDR) 278
  If A Deployment Occurs 172
  Knee Impact Bolsters 167
  Maintaining Your Air Bag System 173
  Side Air Bags 168
  Transporting Pets 190
Air Bag Light. 110, 164, 191
Air Bag Maintenance 173
Air Cleaner, Engine (Engine Air Cleaner Filter). 293
Air Conditioner Maintenance 291
Air Conditioning. 55
Air Conditioning Controls 55
Air Conditioning Filter 66, 292
Air Conditioning, Operating Tips 65, 67
Air Conditioning Refrigerant 291, 292
Air Conditioning System 55, 64, 291
Air Pressure, Tires 316
Alarm (Security Alarm) 112
Alarm System (Security Alarm) 28
Alterations/Modifications, Vehicle 7
Antenna, Satellite Radio 363
Antifreeze (Engine Coolant) 297, 340
  Capacities 340
  Disposal 300
Anti-Lock Brake System (ABS) 130
Anti-Lock Warning Light 119
Assistance Towing 384
Assist, Hill Start 132
Automatic Dimming Mirror 44
Automatic Door Locks 30, 31
Automatic Temperature Control (ATC) 64
Automatic Transaxle 21
  Fluid Level Check 306
Automatic Transmission 204, 205, 303, 305
  Fluid And Filter Changes 304, 306
  Fluid Level Check 304
  Fluid Type 303, 305, 343

Gear Ranges 206, 213
Special Additives 304, 305
Autostick 209, 216
Axle Fluid 343

Battery 113
Charging System Light 113
Belts, Seat 191
Body Mechanism Lubrication 294
B-Pillar Location 311
Brake Assist System 132
Brake Fluid 343
Brake, Parking. 200
Brakes 334
Brake System 301, 334
Master Cylinder 301
Parking 200
Warning Light 110
Brake/Transmission Interlock 205
Bulb Replacement 247
Bulbs, Light 193, 247

Calibration, Compass 107
Camera, Rear 222
Capacities, Antifreeze (Engine Coolant) 340
Capacities, Fluid 340
Caps, Filler
Fuel 223
Oil (Engine) 286, 287, 290
Power Steering 218
Radiator (Coolant Pressure) 299
Carbon Monoxide Warning 190, 340
Cargo Area Cover 75
Cargo Area Features 75
Cargo Compartment 75
Light 75
Luggage Carrier 92
Cargo Light 75
Cargo Load Floor 76
Cargo Tie-Downs 76
Car Washes. 329
Cellular Phone 373, 401
Center High Mounted Stop Light 249
Certification Label 225
Chains, Tire 325
Changing A Flat Tire 253, 307
Check Engine Light (Malfunction Indicator Light). . . .127
Checking Your Vehicle For Safety 190
Checks, Safety 190
Child Restraint 174

Child Restraints
Booster Seats 178
Child Restraints 174
Child Seat Installation 187
How To Stow An Unused ALR Seat Belt 185
Infants And Child Restraints 176
Lower Anchors And Tethers For Children 180
Older Children And Child Restraints 177
Seating Positions 179
Child Safety Locks 32
Clean Air Gasoline 337
Cleaning
Wheels 324
Climate Control 55
Clock. 347, 354
Clutch 301
Clutch Fluid 301
Coin Holder 85
Cold Weather Operation. 198
Compact Disc (CD) Maintenance. 402
Compact Spare Tire 322
Compass. 124
Compass Calibration 107
Compass Variance 108
Connector
UCI 368
Universal Consumer Interface (UCI) 368
Console 85
Contract, Service 406
Coolant (Antifreeze). 340
Coolant Pressure Cap (Radiator Cap). 299
Cooling System. 288, 296
Adding Coolant (Antifreeze) 298
Coolant Level 288, 297, 300
Disposal Of Used Coolant 300
Drain, Flush, And Refill 297
Inspection 300
Points To Remember 300
Pressure Cap 299
Radiator Cap 299
Selection Of Coolant (Antifreeze) 297, 341
Corrosion Protection 328
Cupholders 85
Customer Assistance 404

Dealer Service 289
Defroster, Windshield. 192
Delay (Intermittent) Wipers 52
Diagnostic System, Onboard 125

Dimmer Switch, Headlight 47
Dipsticks
Power Steering 218
Disposal
Antifreeze (Engine Coolant) 300
Door Locks
Child-Protection Door Lock — Rear Doors 32
Door Locks 29
Key Fob 29
Remote 29
Remote Keyless Entry 29
Door Locks, Automatic 30
Door Opener, Garage. 78
Downshifting 204
Driver's Seat Back Tilt 36
Driving. 238
Off-Pavement 238
Off-Road 238

Electrical Power Outlets. 88
Electric Remote Mirrors 46
Electronic Brake Control System 131
Anti-Lock Brake System 130
Electronic Roll Mitigation 138
Traction Control System 134
Electronic Speed Control (Cruise Control) 219
Electronic Stability Control (ESC) 134
Electronic Throttle Control Warning Light 113
Emergency, In Case Of
Jacking 253, 307
Jump Starting 269
Towing 276
Emission Control System Maintenance. 127
Engine 286, 287
Air Cleaner 293
Block Heater 199
Break-In Recommendations 199
Checking Oil Level 288
Coolant (Antifreeze) 288, 297, 341
Cooling 288, 296
Exhaust Gas Caution 190, 340
Jump Starting 269
Oil 290, 340, 341
Oil Filler Cap 286, 287, 290
Oil Filter 291
Oil Selection 290
Oil Synthetic 291
Overheating 273
Enhanced Accident Response Feature 173, 278
Ethanol. 337

Exhaust Gas Caution 190, 340
Exhaust System 190, 295
Exterior Lights 47, 193

Filters
  Air Cleaner 293
  Air Conditioning 66, 292
  Engine Oil 291, 341
  Engine Oil Disposal 291
Flashers
  Hazard Warning 247
  Turn Signal 122, 193, 249
Flooded Engine Starting 198
Fluid, Brake 343
Fluid Capacities. 340
Fluid Leaks. 193
Fluid Level Checks
  Automatic Transaxle 306
  Automatic Transmission 304
  Cooling System 288, 297
  Power Steering 218
Fog Lights 48, 248
Folding Rear Seat 39
Four-Way Hazard Flasher. 247
Four Wheel Drive 217
  Systems 217
Four Wheel Drive Operation 217
Freeing A Stuck Vehicle 274
Fuel 337
  Adding 223
  Additives 339
  Capacity 340
  Clean Air 337
  Ethanol 337
  Filler Cap (Gas Cap) 223
  Gasoline 337
  Light 119
  Materials Added 339
  Methanol 337
  Octane Rating 337, 341
  Tank Capacity 340
Fueling. 223

Garage Door Opener (HomeLink) 78, 83
Gas Cap (Fuel Filler Cap) 126, 223, 225
Gasoline, Clean Air 337
Gasoline (Fuel) 337, 340
Gasoline, Reformulated 337
Gear Ranges. 206, 213
Gear Select Lever Override. 274

General Information. 396
Glass Cleaning 332
Gross Axle Weight Rating. 227
Gross Vehicle Weight Rating 227
GVWR 225

Hands-Free Phone (Uconnect). 373
Hazard Warning Flasher. 247
Headlights 248
  Cleaning 329
  High Beam/Low Beam Select Switch 47
  On With Wipers 49, 53
  Passing 47
  Replacing 248
  Switch 47
Head Restraints 40, 41
Heated Mirrors 46
Heated Seats. 38
Heater 55
Heater, Engine Block 199
High Beam/Low Beam Select (Dimmer) Switch 47
Hill Descent Control 138
Hill Start Assist 132
Hitches
  Trailer Towing 229
HomeLink (Garage Door Opener). 78
Hood Release 72

Ignition 21
  Key 19, 21
Ignition Key Removal 21
Immobilizer (Sentry Key). 25
Inside Rearview Mirror 44
Instrument Cluster. 122
Instrument Panel Lens Cleaning 331
Integrated Power Module (Fuses) 250
Interior And Instrument Lights. 50
Interior Appearance Care 330
Interior Lights. 50
Intermittent Wipers (Delay Wipers). 52
Introduction 4
iPod/USB/MP3 Control
  Bluetooth Streaming Audio 372, 399

Jacking Instructions 255
Jack Location 254
Jack Operation 253, 255, 307
Jump Starting 269

Key-In Reminder. 23

Key, Programming 26
Key, Replacement 26
Keys 19
Key, Sentry (Immobilizer). 25

Lane Change And Turn Signals. 249
Lane Change Assist. 49
Lap/Shoulder Belts 150
Latches. 193
  Hood 72
Leaks, Fluid 193
Life Of Tires 319
Liftgate Window Wiper/Washer 54
Light Bulbs 193, 247
Lights. 193
  Air Bag 110, 164, 191
  Back-Up 249
  Brake Assist Warning 137
  Brake Warning 110
  Cargo 75
  Center Mounted Stop 249
  Cruise 124
  Daytime Running 47
  Dimmer Switch, Headlight 47
  Exterior 193
  Fog 48, 248
  Hazard Warning Flasher 247
  Headlights 47
  Headlights On With Wipers 49, 53
  Headlight Switch 47
  High Beam 47
  High Beam/Low Beam Select 47
  Instrument Cluster 47
  Interior 50
  License 249
  Lights On Reminder 49
  Low Fuel 119
  Malfunction Indicator (Check Engine) 114
  Map Reading 50
  Park 122
  Seat Belt Reminder 109
  Security Alarm 28, 112
  Tire Pressure Monitoring (TPMS) 115
  Traction Control 137
  Turn Signal 49, 122, 193, 249
  Warning (Instrument Cluster Description) 122
Loading Vehicle. 225
  Tires 311
Locks. 29
  Automatic Door 30

Child Protection 32
Door 29
Power Door 30
Lubrication, Body 294
Luggage Rack (Roof Rack) 92
Lug Nuts 335
Lumbar Support 36

Maintenance Schedule 281
Malfunction Indicator Light (Check Engine). 114, 127
Manual, Service. 407
Manual Transaxle
Fluid Level Check 306, 307
Manual Transmission. 303
Fluid Level Check 303
Frequency Of Fluid Change 303
Lubricant Selection 303, 306, 343
Map/Reading Lights. 50
Master Cylinder (Brakes) 301
Methanol 337
Mini-Trip Computer. 124
Mirrors 44
Automatic Dimming 44
Electric Powered 46
Exterior Folding 45
Heated 46
Outside 45
Rearview 44
Vanity 46
Modifications/Alterations, Vehicle 7
Monitor, Tire Pressure System. 139
Mopar Parts 407

New Vehicle Break-In Period 199

Occupant Restraints. 147
Octane Rating, Gasoline (Fuel) 337
Oil, Engine 290, 340, 341
Capacity 340
Change Interval 290
Checking 288
Disposal 291
Filter 291, 341
Filter Disposal 291
Identification Logo 290
Materials Added To 291
Pressure Warning Light 112
Recommendation 290, 340
Synthetic 291
Viscosity 290

Oil Filter, Change 291
Oil Filter, Selection. 291
Oil Pressure Light 112
Onboard Diagnostic System 125
Opener, Garage Door (HomeLink) 78
Operating Precautions 125
Operator Manual (Owner's Manual). 5
Overheating, Engine 273
Owner's Manual (Operator Manual) 5, 407

Paint Care. 328
Parking Brake 200
Passing Light 47
Personal Settings 105
Pets 190
Phone, Cellular 373
Phone, Hands-Free (Uconnect) 373
Placard, Tire And Loading Information 311
Power
  Door Locks 30
  Mirrors 46
  Outlet (Auxiliary Electrical Outlet) 88
  Steering 218
  Sunroof 70
  Transfer Unit 307
  Windows 68
Power Seats
  Down 37
  Forward 37
  Rearward 37
  Tilt 37
  Up 37
Power Steering Fluid 343
Power Transfer Unit 307, 343
Pregnant Women And Seat Belts 158
Preparation For Jacking 254
Pretensioners
  Seat Belts 159
Programmable Electronic Features. 105

Radial Ply Tires. 317
Radiator Cap (Coolant Pressure Cap). 299
Radio 130
  Operating Instructions Auxiliary Mode 353
  Operating Instructions Radio Mode 347
Radio 130 With Satellite Radio
  Multimedia Satellite Radio 362
  Operating Instructions Radio Mode 353
Radio Frequency
  General Information 21, 27

Radio Operation 401
Rear Axle (Differential) 306
Rear Camera 222
Rear Drive Assembly 306
Rear Seat, Folding 39
Rearview Mirrors 44
Rear Wiper/Washer 54
Recreational Towing 237
Reformulated Gasoline 337
Refrigerant 292
Reminder, Seat Belt 149
Remote Control
  Security Alarm 28
Remote Sound System (Radio) Controls 367
Remote Starting System 23
Replacement Bulbs 247
Replacement Keys 26
Replacement Tires 320
Reporting Safety Defects 407
Restraint, Head 40, 41
Restraints, Child 174
Retractable Cargo Area Cover 75
Roll Over Warning 4
Roof Type Carrier 92
Rotation, Tires 326
Safety Checks Inside Vehicle 191
Safety Checks Outside Vehicle 193
Safety Defects, Reporting 407
Safety, Exhaust Gas 190
Safety Information, Tire 307
Safety Tips 190
Satellite Radio Antenna 363
Schedule, Maintenance 281
Seat Belt
  Adjustable Upper Shoulder Belt Anchorage 154
  Automatic Locking Retractor (ALR) 159
  Energy Management Feature 159
  Lap/Shoulder Belt Operation 152
  Lap/Shoulder Belts 150
  Lap/Shoulder Belt Untwisting 154
  Pregnant Women 158
  Seat Belt Extender 157
  Seat Belt Pretensioner 159
  Seat Belt Reminder 149
Seat Belt Maintenance 330
Seat Belt Reminder 149
Seat Belts 148, 191
  Adjustable Shoulder Belt 154
  Adjustable Upper Shoulder Anchorage 154
  Child Restraint 174

Extender 157
Front Seat 148, 150, 152
Inspection 191
Operating Instructions 152
Pregnant Women 158
Pretensioners 159
Rear Seat 150
Reminder 109
Untwisting Procedure 154
Seats 34, 37
Adjustment 34, 37
Heated 38
Lumbar Support 36
Rear Folding 39
Seatback Release 36
Tilting 36
Security Alarm 28, 112
Selection Of Coolant (Antifreeze) 341
Sentry Key (Immobilizer) 25
Sentry Key Programming 26
Sentry Key Replacement 26
Service Assistance 404
Service Contract 406
Service Manuals 407
Settings, Personal 105
Setting The Clock 347, 354
Shift Lever Override 274
Shift Speeds, Manual Transmission 203
Shoulder Belts 150
Signals, Turn 122, 193, 249
Snow Chains (Tire Chains) 325
Snow Tires 322
Spare Tire 254, 322, 323
Spark Plugs 341
Speed Control
Accel/Decel 221
Cancel 220
Resume 220
Speed Control (Cruise Control) 219
Starting 197
Automatic Transmission 197
Cold Weather 198
Engine Fails To Start 198
Manual Transmission 197
Remote 23
Starting Procedures 197
Steering 43
Power 218
Tilt Column 43
Steering Wheel Audio Controls 367

Steering Wheel Mounted Sound System Controls 367
Storage 328
Storage Bin 86
Storage, Vehicle 66
Stuck, Freeing 274
Sunroof
  Closing 71
  Opening 70
Sun Roof 70
Sun Visor Extension 47
Supplemental Restraint System - Air Bag 165
Synthetic Engine Oil 291
System, Remote Starting 23

Taillights 249
Temperature Control, Automatic (ATC) 64
Tie Down Hooks, Cargo 76
Tilt
  Down 37
  Up 37
Tilt Steering Column 43
Tire And Loading Information Placard 311
Tire Markings 308
Tires 193, 315, 322, 326
  Aging (Life Of Tires) 319
  Air Pressure 315
  Chains 325
  Changing 253, 307
  Compact Spare 322
  General Information 315, 322
  High Speed 317
  Inflation Pressures 316
  Jacking 253, 307
  Life Of Tires 319
  Load Capacity 311, 312
  Pressure Monitor System (TPMS) 139
  Pressure Warning Light 115
  Quality Grading 326
  Radial 317
  Replacement 320
  Rotation 326
  Safety 307, 315
  Snow Tires 322
  Spare Tire 254, 322, 323
  Spinning 318
  Trailer Towing 232
  Tread Wear Indicators 318
Tire Safety Information 307
Tire Service Kit 262, 263, 265, 266, 267, 268, 269
Tongue Weight/Trailer Weight 230

Towing 227
24-Hour Towing Assistance 384
Disabled Vehicle 276
Guide 230
Recreational 237
Weight 230
Towing Assistance 384
Towing Vehicle Behind A Motorhome 237
Traction Control 134
Trailer Towing 227
Cooling System Tips 236
Hitches 229
Minimum Requirements 231
Tips 235
Trailer And Tongue Weight 230
Wiring 233
Trailer Towing Guide 230
Trailer Weight 230
Transaxle
Automatic 21
Transmission
Automatic 204, 205, 303, 305
Fluid 303, 305, 343
Transmitter, Garage Door Opener (HomeLink) 78
Transporting Pets 190
Tread Wear Indicators 318
Trip Computer 124
Turn Signals 49, 122, 249

UCI Connector 368
Uconnect
Advanced Phone Connectivity 386
Phone Call Features 380
Phone Features 382
Uconnect (Hands-Free Phone) 373
Uniform Tire Quality Grades 326
Universal Consumer Interface (UCI) Connector 368
Universal Transmitter 78
Untwisting Procedure, Seat Belt 154

Vanity Mirrors 46
Variance, Compass 108
Vehicle Identification Number (VIN) 334
Vehicle Loading 225, 312
Vehicle Modifications/Alterations 7
Vehicle Security Alarm (Security Alarm) 28
Vehicle Storage 66, 328
Voice Command
Commands 397
System Operation 396

Voice Training 400
Voice Recognition System (VR) 396

Warning, Roll Over 4
Warnings And Cautions 7
Warranty Information 406
Washer
Adding Fluid 289
Washers, Windshield 53
Washing Vehicle 329
Wheel And Wheel Trim 324
Wheel And Wheel Trim Care 324
Wind Buffeting 71
Window Fogging 66
Windows 68
Power 68
Windshield Defroster 192
Windshield Washers 51, 53
Windshield Wiper Blades 294
Windshield Wipers 51
Wiper Blade Replacement 294
Wipers, Intermittent 52

INSTALLATION OF RADIO TRANSMITTING EQUIPMENT

Special design considerations are incorporated into this vehicle's electronic system to provide immunity to radio frequency signals. Mobile two-way radios and telephone equipment must be installed properly by trained personnel. The following must be observed during installation.

The positive power connection should be made directly to the battery and fused as close to the battery as possible. The negative power connection should be made to body sheet metal adjacent to the negative battery connection. This connection should not be fused.

Antennas for two-way radios should be mounted on the roof or the rear area of the vehicle. Care should be used in mounting antennas with magnet bases. Magnets may affect the accuracy or operation of the compass on vehicles so equipped.

The antenna cable should be as short as practical and routed away from the vehicle wiring when possible. Use only fully shielded coaxial cable.

Carefully match the antenna and cable to the radio to ensure a low Standing Wave Ratio (SWR).

Mobile radio equipment with output power greater than normal may require special precautions.

All installations should be checked for possible interference between the communications equipment and the vehicle's electronic systems.

STICK WITH THE SPECIALISTS®

17MK74-126-AC
©2016 FCA US LLC. All Rights Reserved.
Jeep is a registered trademark of FCA US LLC.

Third Edition
Printed in U.S.A.